Level Pressure Flow Temperature Liquid Analysis Registration Systems Components Services Solutions

Technical Information

Prothermo NMT532

Intrinsically safe multi-signal converter with precision average temperature sensor for inventory control

Application

The Prothermo NMT532 consists of an intelligent local HART® signal converter and average temperature sensor.

For average temperature measurement, it consists of precision multi-spot Pt100 (Max.6) elements which have fixed interval (2 m or 3 m).

The NMT532 is a highly capable solution for a variety of tank gauging applications and provides constant average temperature data via local HART® communication.

For accurate inventory measurement, it is best suited connected to Tank Side Monitor NRF590 with Micropilot radar tank gauge or NMS5 Proservo.

Features and benefits

- High accuracy
- Intrinsically safe device allowing for the safest electrical configuration possible.
- Compatible with user friendly ToF (Time-of-Flight) Tool or FieldCare
- Simple and Economical
- Compact size and weight
- High-reliability and easy installation
- Maintenance free

TI00049G/08/EN/14.11
71136678

Endress+Hauser
People for Process Automation

Table of Contents

Function and system design 3
Measuring System 3
Operation Principle 3
System design 4
Connection with Tank Side Monitor NRF590 5
NMT532 + FMR53x + NRF590 5
Connection with Proservo NMS5 6
NMT532 + NMS5+ NRF560 6

Input 7
Measured variables 7
Number of elements 7

Output 7
Communication 7 . . . . . .
Alarm signal 7
Output signal 7
Connection 7

Auxiliary energy 7
Load HART® 7
Cable entry 7
Supply voltage 7
Power consumption 7
Grounding 7

Performance characteristics 8
Temperature Accuracy 8
Temperature measuring range 8
Reference operating conditions. 8
Maximum measured error 8
New module 8

Operating condition : Installation 9
Process connection 9
Recommended installation height. 9
Recommended still pipe installation 10
Installation equipment 10
Anchor weights 11
Wire hook+ Top anchor & Stilling well 11

Operating condition: terminal connection 13
NMT532 Terminal 13
NMS5 terminal 13
NRF590 terminal 14

Operating condition : Environment 15
Ambient temperature range 15
Storage temperature 15
Climate class 15
Degree of protection 15
Electromagnetic compatibility 15

Operating condition : Process 15
Process temperature range 15
Process pressure limits 15
Data transmmision 15

Mechanical construction 16
NMT532 dimension 16
Weight 16
Material 16

Human interface 16
Operation using Tof Tool, FieldCare 16

Certificates and approvals 17
CE approvals 17
PTB W&M approval 17
External standards and guidelines 17

Ordering information 18

Accessories 19
Anchor weight (high profile, D120) mounting attachement option: B 19
Anchor weight (low profile, hexagon H41) mounting attachment option: C 19
Wire hook, Top anchor mounting attachment option: D 20

Certificates and approvals. 21
CE approvals 21
Ex approvals 21
External standards and guide line 21

Ordering Information 22
Prothermo NMT532 22

Accessories 23
Anchor weight (Tall profile) 23
Anchor weight (Low profile) 23
Wire hook, Top anchor 24

Documentation 25
Technical Information 25
Operating Instructions 25
Certificates 25

Appendix 26
Stainless Steel conversion table 26

Function and system design

Measuring System

The NMT532 is compact and economical. The average Temperature sensor consists of six Pt100 elements at 2 or 3 meter intervals. Temperature data is transmitted to the Tank Side Monitor NRF590 or NMS5 via intrinsically safe (i.s.) 2-wire local HART® signal.

Operation Principle

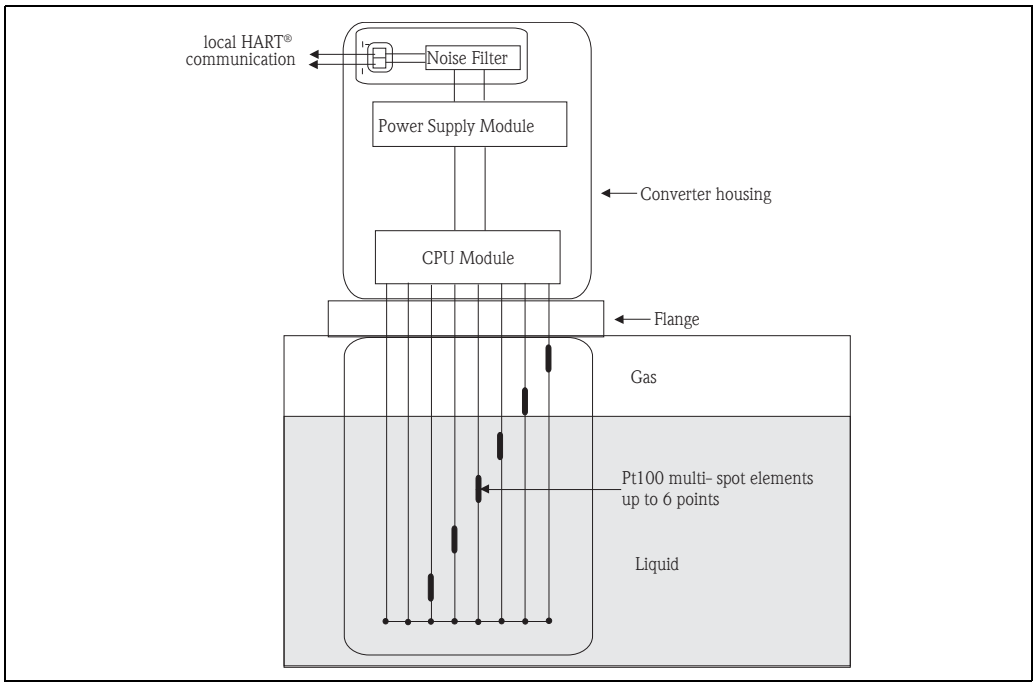

System design

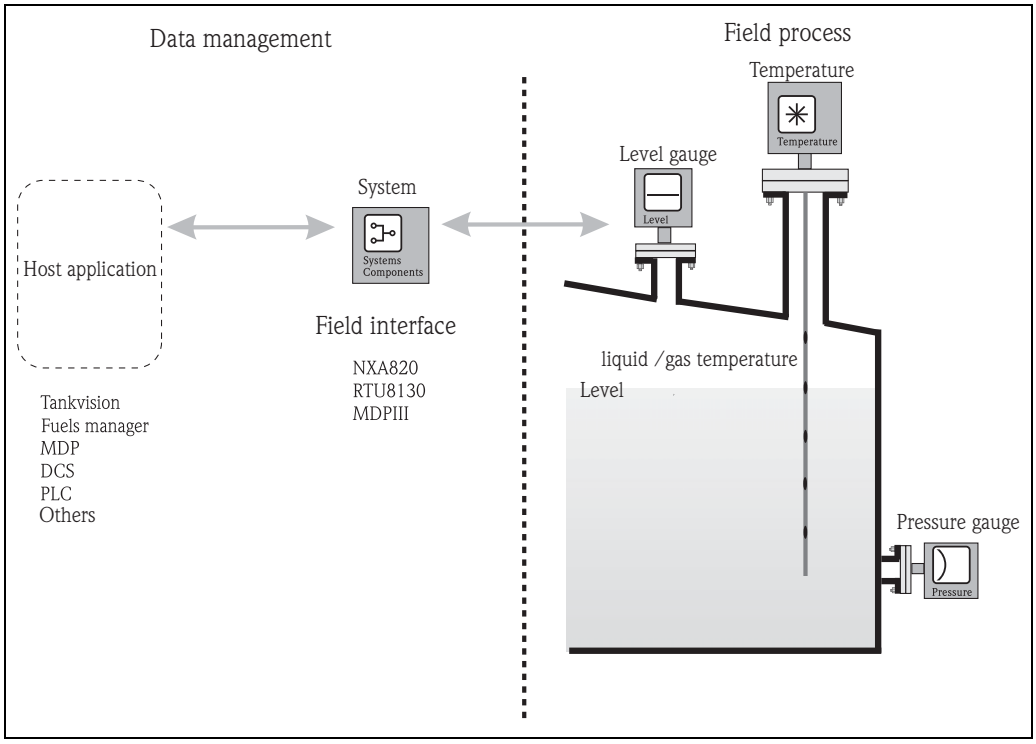

Endress+Hauser offers a wide range of solutions to integrate field data into your process management requirement.
The following diagrams describe some individual solutions according to various Ex concepts. For additinoal application requirements, contact your local Endress+Hauser representative.

Connection with Tank Side Monitor NRF590

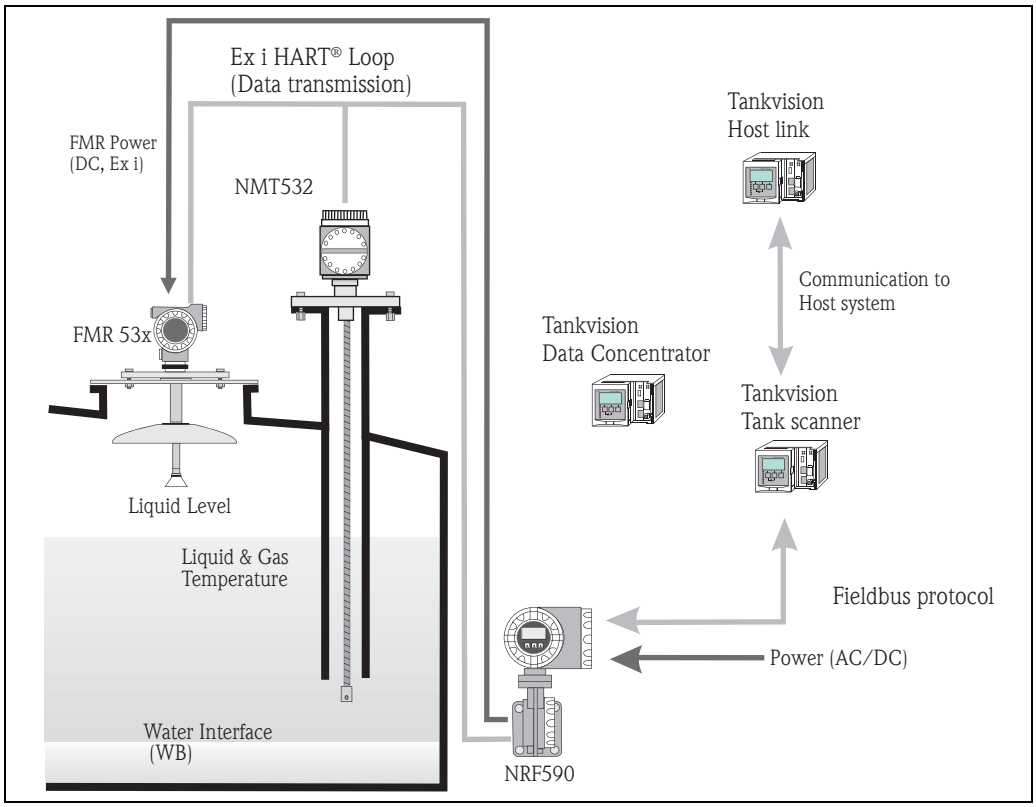

NMT532 + FMR53x + NRF590

Temperature and level measurement, with data collection and calculations via the NRF590, allows for optimal inventory control. Basic functionality of the NMT532 is displayed and configured on the NRF590. Detailed NMT532 functionality and data access can be performed by the ToF Tool or FieldCare.

The NMT532 receives radar level data from the NRF590 and then calculates liquid and gas phase average temperature. Calculated and standard data, including temperature element raw data and device status, are transmitted to the NRF590.

All gathered data in the interface unit is sent to inventory management software, such as Endress+Hauser tankvision, Fuelsmanager, Tank computer or directly sent to the customer's specific DCS or PLC.

Connection with Proservo NMS5

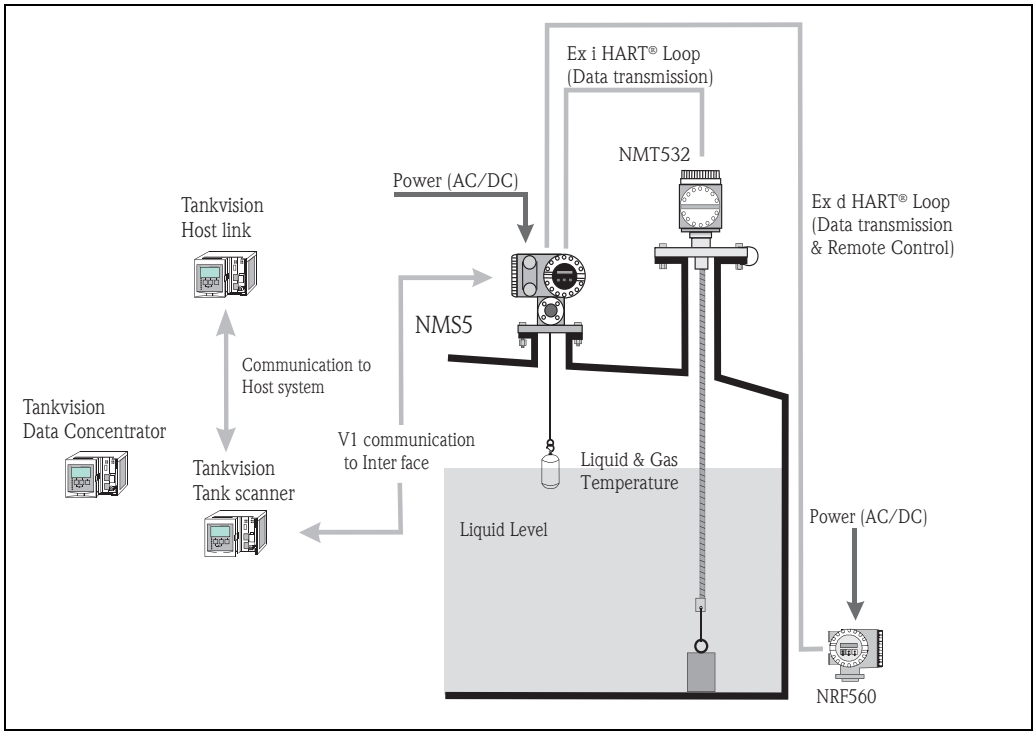

NMT532 + NMS5+ NRF560

The NMT532 is used most effectively with the NMS5 to provide average temperature, level, water interface, and density measurement.

All the necessary configuration and parameter settings for the NMT532 are performed via either the Proservo NMS5 or ToF Tool or FieldCare.

The NMT532 receives liquid level data from the Proservo, then calculates liquid and gas phase average temperature. Calculated data and basic information, including raw data for each temperature element and device status, are transmitted to the Proservo.

Since the Proservo is a multi-functional device (measurement and data transmission), a Promonitor NRF560 can act as a tank side remote data indicator and controller for Proservo.

All gathered data in the interface unit is sent to inventory management software, such as Endress+Hauser's Tankvision, Fuelsmanager, Tank computer or directly sent to the customer's specific DCS or PLC.

Input

Measured variables

Liquid and gas temperature range : -20 ...+100 °C (-4 ...+212 °F)
Probe length : 40m or less

Number of elements

Maximum of 6(2 m or 3 m interval)

Output

Communication

2 wire, Endress + Hauser local HART® protocol to host commanding gauge
- Tank Side Monitor NRF590
- Proservo NMS5

Alarm signal

Error information via the following interface and transmission digital protocol. Please refer to Operating Instructions of each device.
- Proservo NMS5 ... BA00401G
- Tank Side Monitor NRF590 ... BA00256F, BA00257F

Output signal

Temperature data via 2 wire intrinsically safe local HART® protocol.

Connection

- Proservo NMS5
- Tank Side Monitor NRF590

Auxiliary energy

Load HART®

Minimum loading for local HART® circuit : 250Ω

Cable entry

Wiring of the NMT 532 must meet intrinsically safe requirements.
The following cable entries are available:
- Thread NPT 1/2
- Thread M 20

Supply voltage

16...30V : Ex ia
Only for connection to a certified intrinsically safe circuit, with the following maximum values.

Ui = 30 V Ii = 120 mA Pi = 1 W	Internal capacitance Ci = 5.3 nF Internal inductance Li = 48 μH

Power consumption

6mA

Grounding

The NMT532 must be grounded to the tank potential before connection to host gauge. All ground connections must be compliant with local and company regulations, and checked before the equipment is commissioned.

Performance characteristics

Temperature Accuracy

±0.1°C or better (at reference condition)

*Reference
Accuracy of RTD – Temperature conversion.

Temperature measuring range

-20 to +100°C (-4 to +212°F)

Reference operating conditions

- Temperature = +25°C(77°F) ±5 (9°F)
- Pressure = 1013 hPa (mbar) abs.(14.7 psi)±20 hPa (mbar) (0.3 psi)
- Relative humidity (air) = 65% ±20%

Maximum measured error

Typical statements for reference conditions, include linearity, repeatability, and hysteresis:

- Linearity:

– Temperature: ±0.15°C (0.27°F) + element deviation (based on IEC class A standard)

New module

The Prothermo NMT 532 employs a completely new electronic module compared to the previous NMT 535.

	NMT 532	NMT 535
CPU Performance	16 bit	8 bit
Clock speed	2.7648 MHz	0.9216 MHz
Memory capacity (RAM)	20K bytes	176 bytes
EEPROM	2K bytes	256 bytes
Flash memory	256K bytes	16K bytes
Total # of print boards	4 (5 with Capacitance board)	5
Current consumption (Converter + temp. probe)	6mA@16VDCEx ia 8mA@16VDCEx d[ia]	10mA@16VDC

Operating condition : Installation

Process connection

The following flange sizes are available:
- 2" 150Ibs RF, 304 flange ANSI B16.5
- DN50 PN B1, 304 flange EN1092-1(DIN2527 C)

Recommended installation height

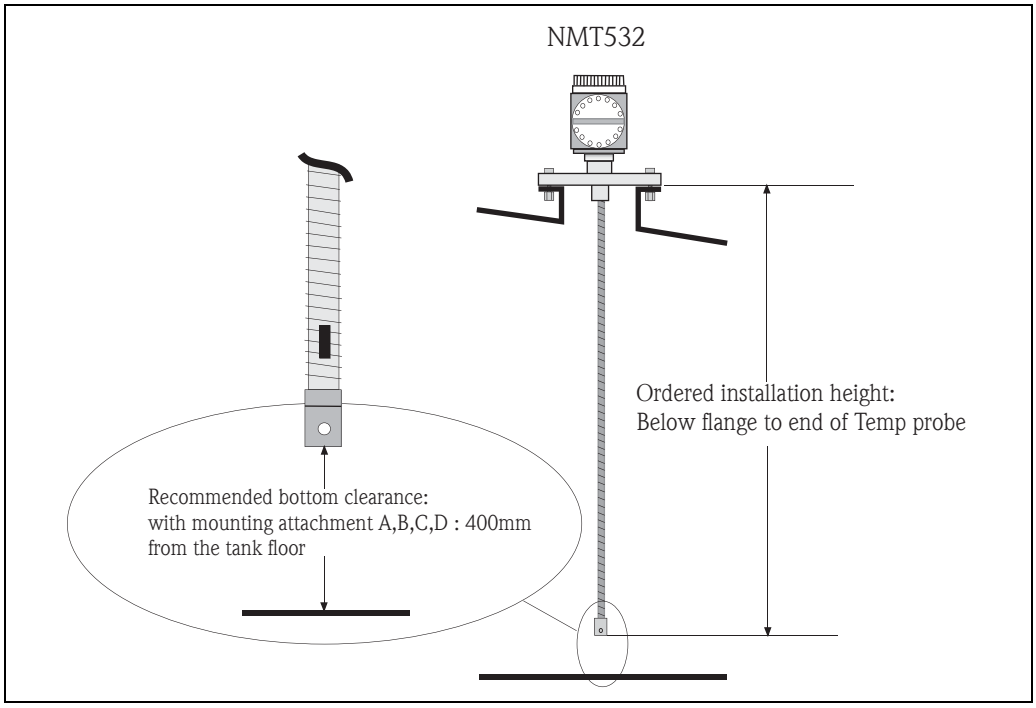

Note!
The required bottom clearance of both the temperature probe and WB sensor depends on the anchoring method. Consider the required bottom clearance when ordering the NMT 539. Please see the recommended bottom clearance in the above illustration and/or consult your Endress+Hauser representative for further information.

The standard location of the lowest temperature element should be set at 500 mm (20") from the tank bottom regardless of probe type.

Recommended still pipe installation

Note!
Datum plate should be mounted on tank bottom Ⓐ below the slotted still pipe Ⓑ or located at least 300 (12 inchs) below the slotted still pipe (as shown below drawing).
If anchor weight is not used with still pipe method, the water bottom should extend out from the end of the still pipe, enough to allow liquid to enter/exit the pipe.

Caution!
Do not allow turbulence to carry/shake the water bottom sensor laterally, such movement may damage the sensor.

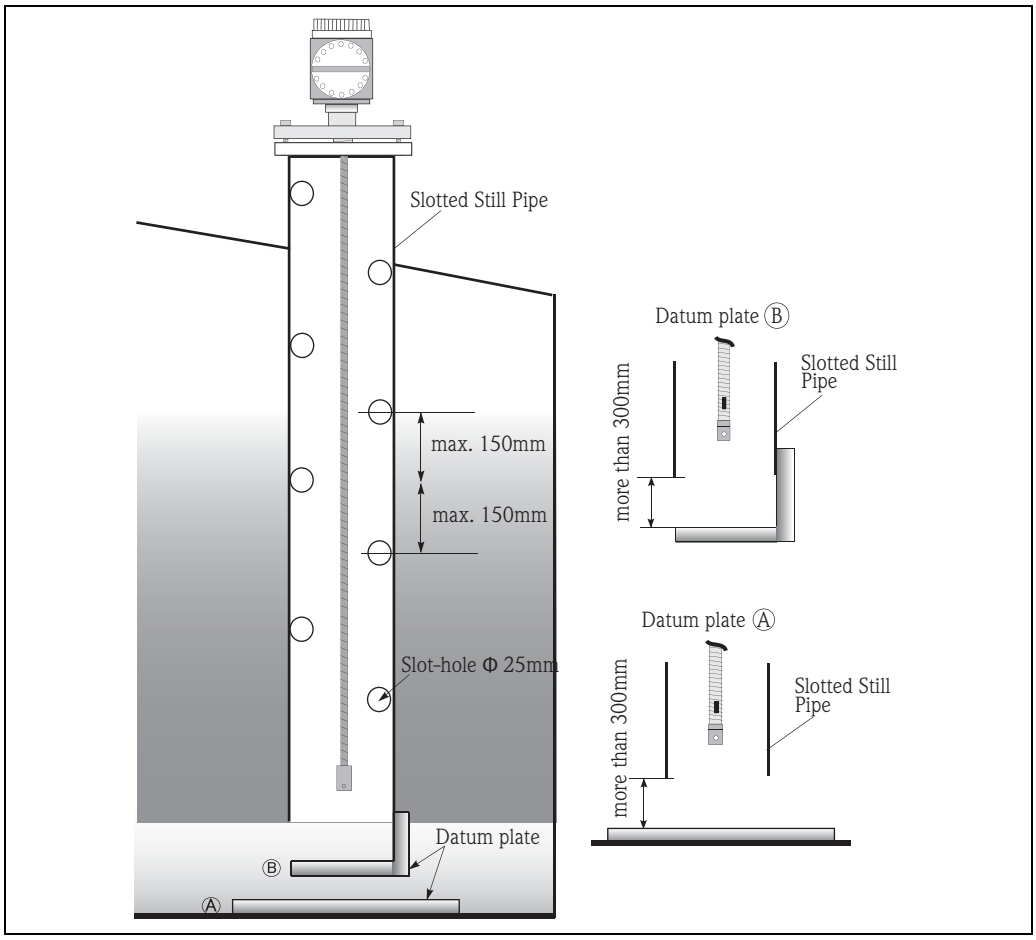

Installation equipment

Contents of anchoring hardware: Based on the choice of "100: Mounting attachment"

	A: No installation Material	**B: Anchor weight (High profile, D120)**	**C: Anchor weight (Low profile, hexagon H41)**	**D: Tension wire + wire hook + NPT1 top anchor**	**F: Tension wire + wire hook + R1 top anchor**
Converter + Temp. probe	bottom hook	bottom hook anchor weight sling wire	bottom hook anchor weight sling wire	bottom hook base plate wire hook NPT1 top anchor tension wire	bottom hook base plate wire hook R1 top anchor tension wire

Anchor weights

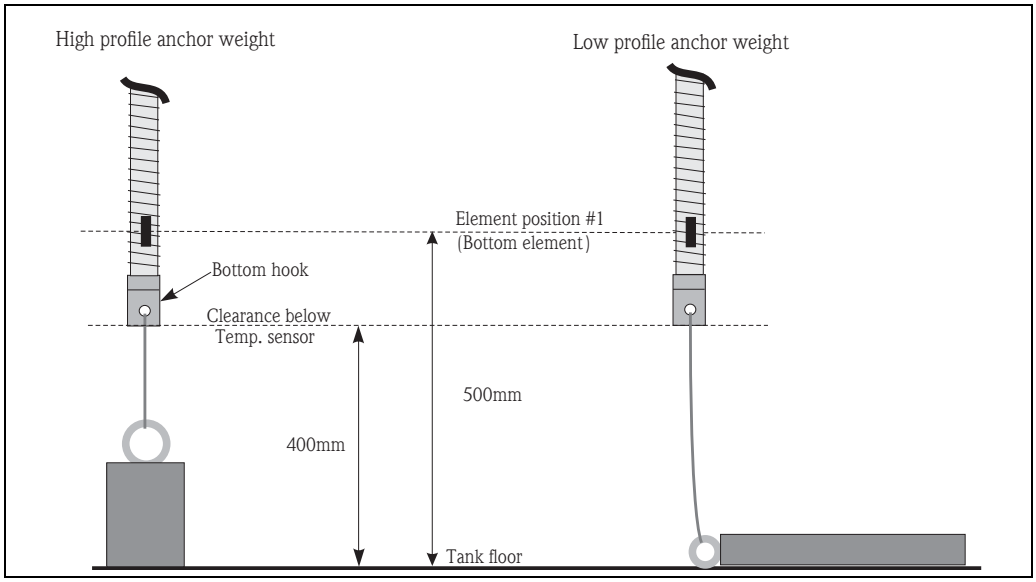

"High profile anchor weight" is the anchor method designed for converter+temperature probe.
"Low profile anchor weight" is the anchor method designed for small tank nozzle [max.50A(2")].
Temperature probes with anchor weights methods have a recommended clearance 400mm (16").

Wire hook+ Top anchor & Stilling well

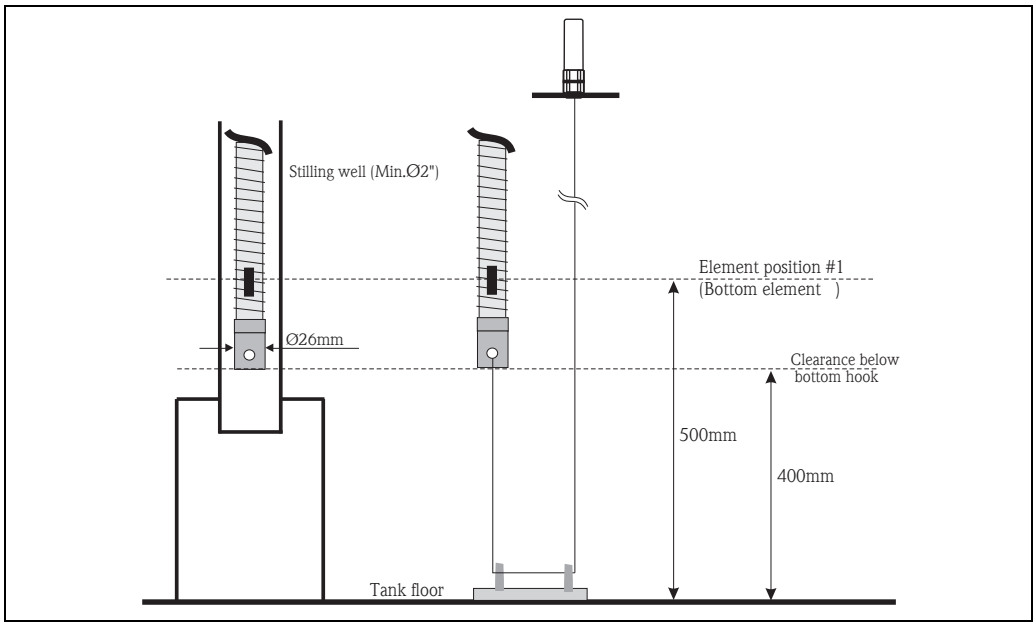

Temperature probes with "Wire hook + Top anchor" and "Stilling well" methods have a recommended clearance 400mm (16").

*Refer to Accessories for anchor weight, wire hook, top anchor details.

Prothermo NMT532 #1 Element position

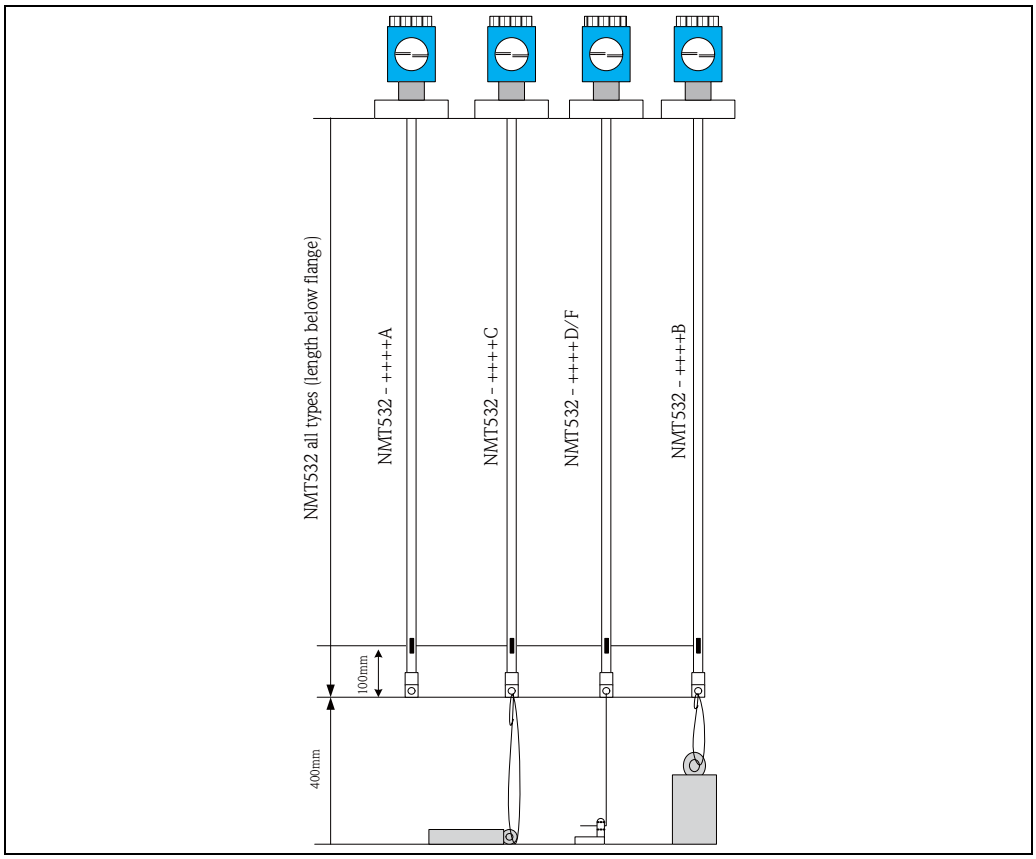

Mounting and element position of Prothermo NMT532 anchor weight method

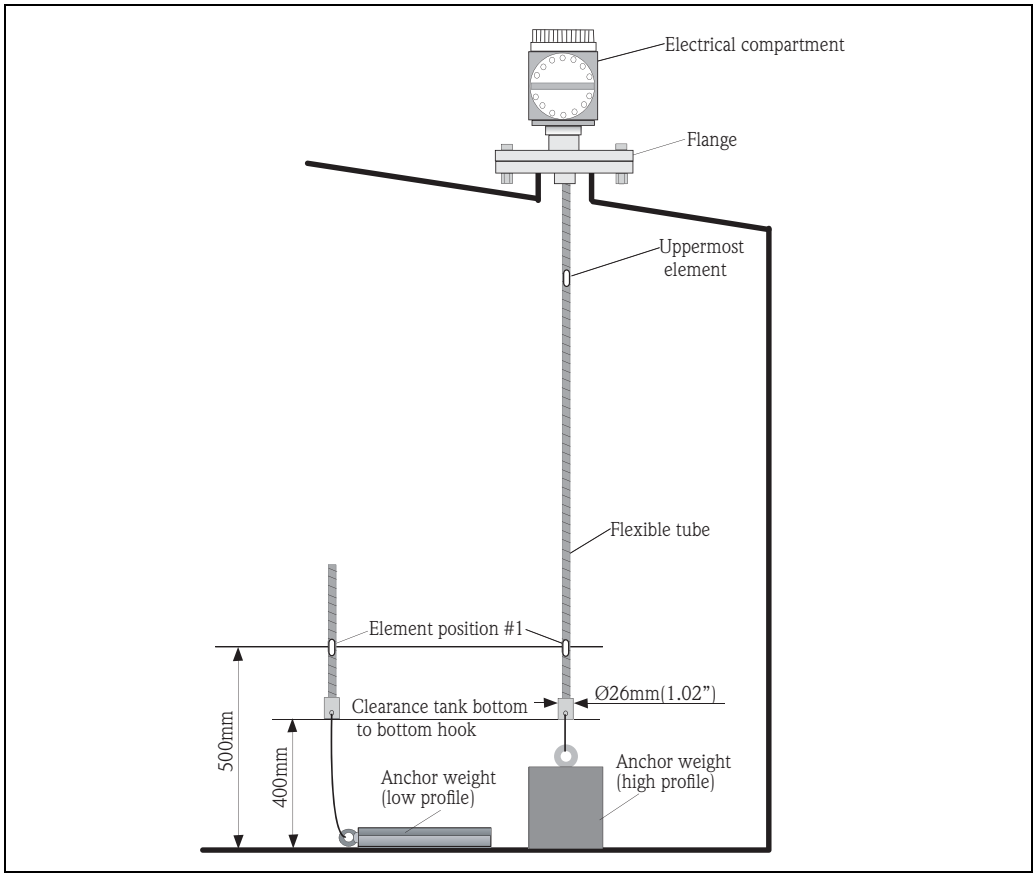

Operating condition: terminal connection

NMT532 Terminal

Note!
The NMT532 allows an intrinsically safe HART® connection only. Please refer to the IS regulation for establishing wiring & field device layout.

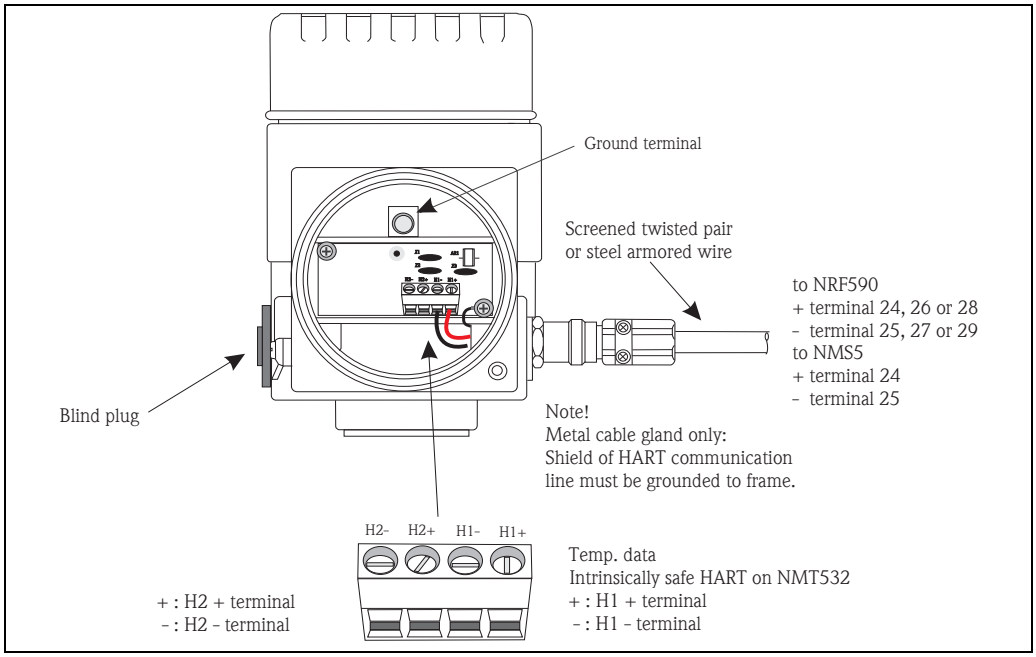

NMS5 terminal

Since the Prothermo NMT 532 is an intrinsically safe instrument, the terminal connection to the Ex i side on local HART® connection is allowed on the NMS terminal housing.

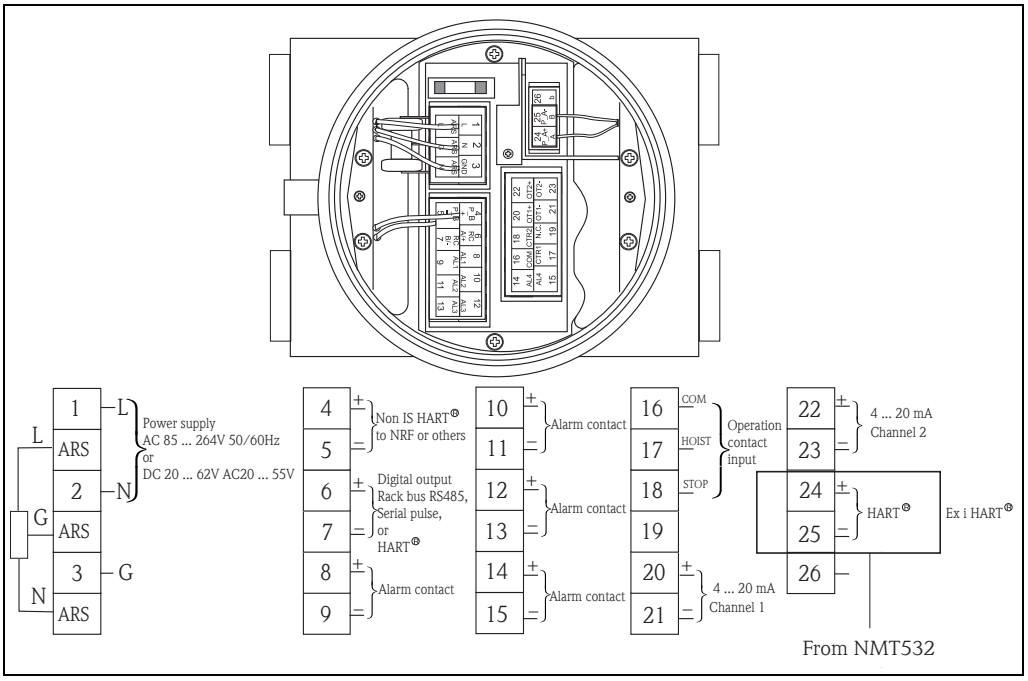

Note!
Do not connect NMT532 HART® communication on terminal 4 & 5 on the Proservo NMS5. These terminals are designed to connect Ex d HART® communication.

NRF590 terminal

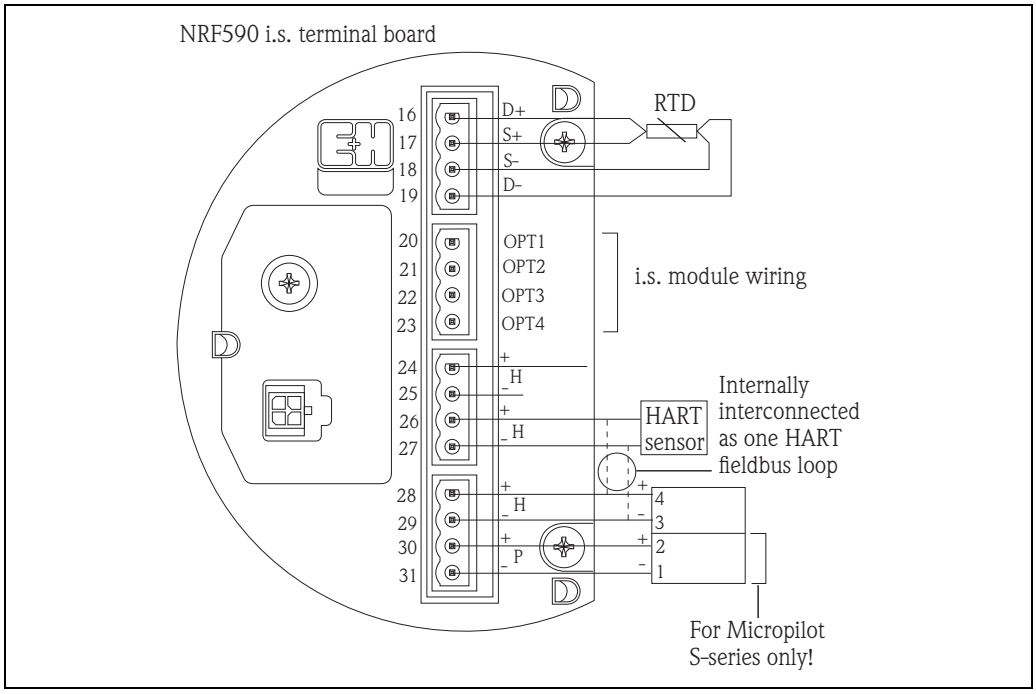

Note!
The Tank Side Monitor NRF590 has three sets of IS HART® terminals. These three pairs are looped internally.

Caution!
Do not connect signal HART® lines from NMT532 to terminal 30 & 31. They are designed to supply drive power of FMR 53x series only.

Operating condition : Environment

Ambient temperature range	-40 C°... +85C°(-40°F...+185°F)
Storage temperature	-40 C°... +85C°(-40°F...+185°F)
Climate class	DIN EN 60068-2-38 (test Z/AD)
Degree of protection	Housing : IP65, (Converter only, open housing: IP20) Probe : IP68
Electromagnetic compatibility	When installing the probes in metal and concrete tanks and when using a coax probe: ■ Interference Emission to EN 61326, Electrical Equipment Class B ■ Interference Immunity to EN 61326, Annex A (Industrial)

Operating condition : Process

Process temperature range	Temperature probe : -40 ... +100°C (-4 to ... 212°F)
Process pressure limits	100kPa
Data transmission	2.5mm coaxial cable & common ground

Mechanical construction

NMT532 dimension

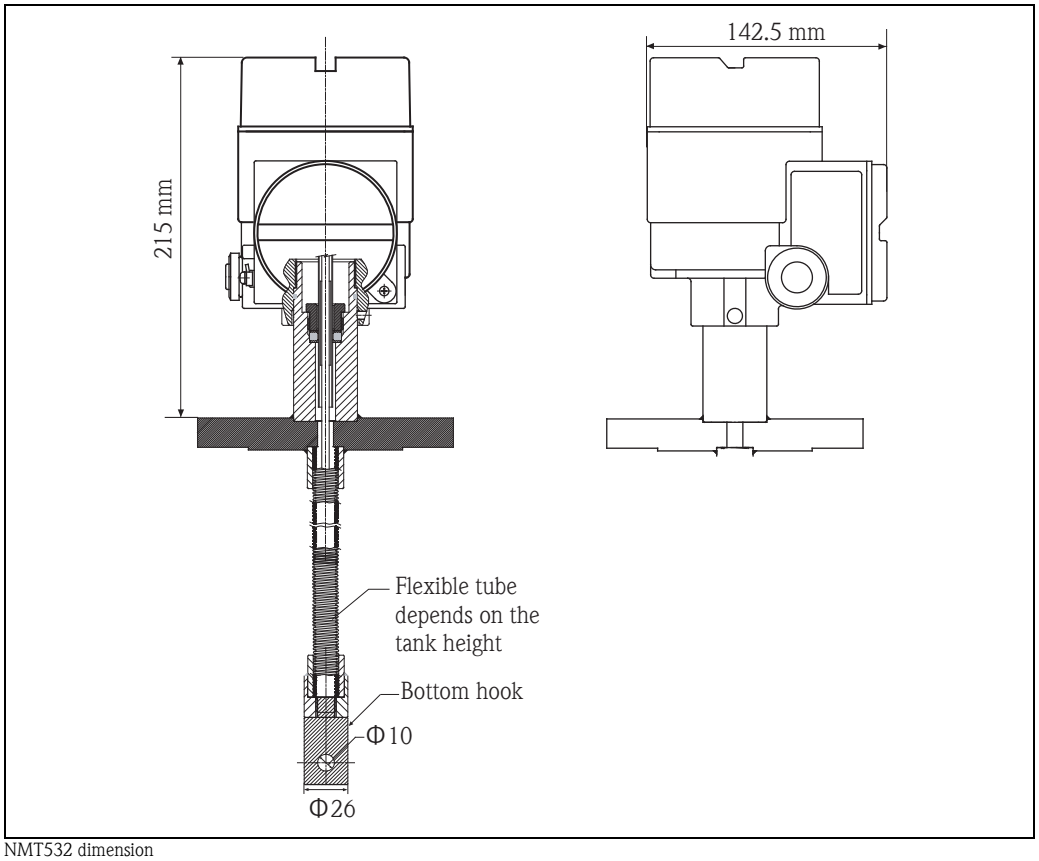

NMT532 dimension

Weight

Approx. 8kg
Condition:
6 elements
Temp. probe : 11.5m
Flange : 2" 150lbs RF, SUS304

Material

Elements : Class A Pt100, IEC PUB 751 1995, JIS 1604 1997
Housing : Aluminum diecast
Temp probe : SUS316 flexible tube

Human interface

Operation using ToF Tool, FieldCare

The Prothermo NMT532 can also be operated via the ToF Tool or FieldCare Package. These programs support commissioning, securing of data, signal analysis and documentation of the instruments. They are compatible with the following operating systems: WinNT4.0, Win 2000 and Win XP.

The ToF Tool and FieldCare Packages support the following functions:
- Online configuration of transmitters
- Loading and saving of instrument data (Upload/Download)
- Documentation of measuring points

Certificates and approvals

CE approvals

By attaching the CE mark, Endress+Hauser confirms that the instruments pass the required tests.

Ex approval

Ex approval	Class
ATEX	II 1/2 G Ex ia IIB T4...T6
IEC	Ex ia IIB T4 -T6 Ga
FM	IS Class 1, Div. 1, Gp. C, D, T6, T4, T3, T2 Class 1, Zone 0, AEx ia IIB, T6, T4, T3, T2
CSA	Ex ia Class 1, Div.1, Gp. C, D, T6...T2 Ex ia IIB T6...T2

External standards and guidelines

IEC 61326 Appendix : A, Immunity according to table A-1

EN 60529
Protection class of housing (IP-code)

EN 61326
Emissions (equipment class B), compatibility (appendix A - industrial area) EN61000-4-2
Immunity to electrostatic discharge

IEC 61508
Functional safety of electrical/electronic/programmable electronic safety-related systems

Ordering information

010	Protection class:
7	FM IS Cl.I Div.1 Gr. A-D
8	CSA IS Cl.I Div.1 Gr. A-D
B	ATEX Ex ia IIB T4 - T6
F	IEC Ex ia IIB T4 - T6 Ga
9	Special version, TSP-no. to be spec.

020	Cable Entry:
B	Thread NPT1/2
D	Thread M20
9	Special version, TSP-no. to be spec.

030	Process connection :
1	2" 150lbs RF, SUS304, flange ANSI B16.5
2	DN50 PN10 B1, SUS304, flange EN1092-1 (DIN2527 C)
9	Special version, TSP-no. to be spec.

040	Probe Length ; Element ; Interval:
022	...mm; 2x Pt100; 2 m
032	...mm; 3x Pt100; 2 m
042	...mm; 4x Pt100; 2 m
052	...mm; 5x Pt100; 2 m
062	...mm; 6x Pt100; 2 m
023	...mm; 2x Pt100; 3 m
033	...mm; 3x Pt100; 3 m
043	...mm; 4x Pt100; 3 m
053	...mm; 5x Pt100; 3 m
063	...mm; 6x Pt100; 3 m

050	Cable entry:
A	Not selected
B	Anchor weight, high profile
C	Anchor weight, low profile
D	Tension wire, wire hook, NPT1 top anchor
F	Tension wire, wire hook, R1 top anchor
Y	Special version, TSP-no. to be spec.

NMT532-										Complete product designation

Accessories

Anchor weight (high profile, D120) mounting attachment option: B

This high profile anchor type is designed for Converter + temperature probe versions.

Caution!
Installation of the anchor weight will cause the lowest temperature measurement position to be raised approximately 400mm (16") from the tank floor.

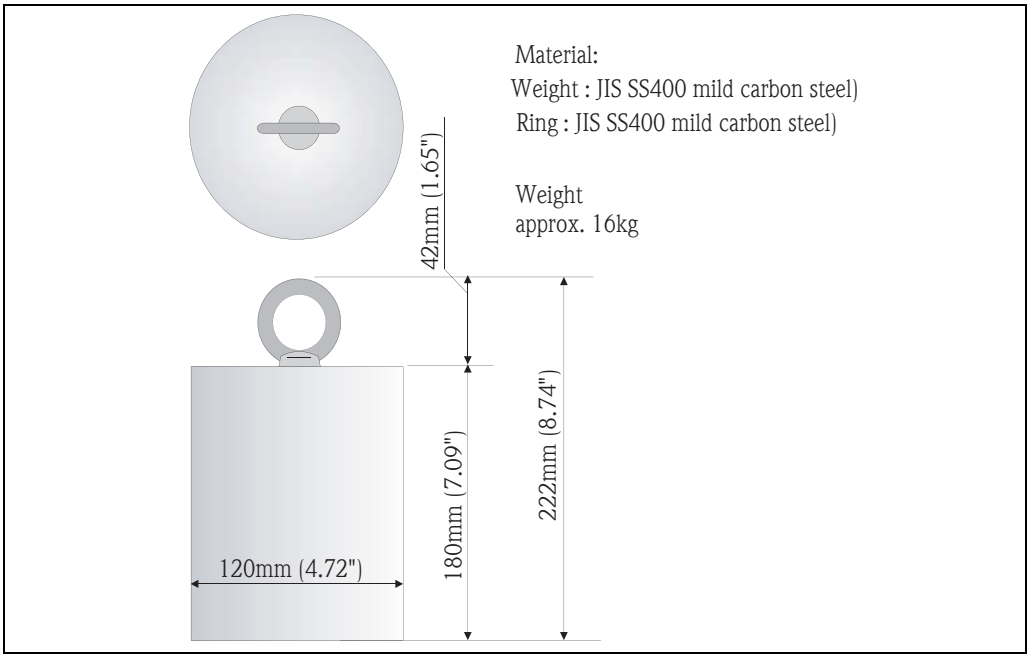

Different dimensions, weight and material for the anchor weight are also available.

Anchor weight (low profile, hexagon H41) mounting attachment option: C

The low profile anchor weight is mainly designed to stabilize the WB sensor, securing it straight up without shortening the WB measuring range. It is also suitable for an existing tank installation with a small nozzle opening for converter and temperature version.

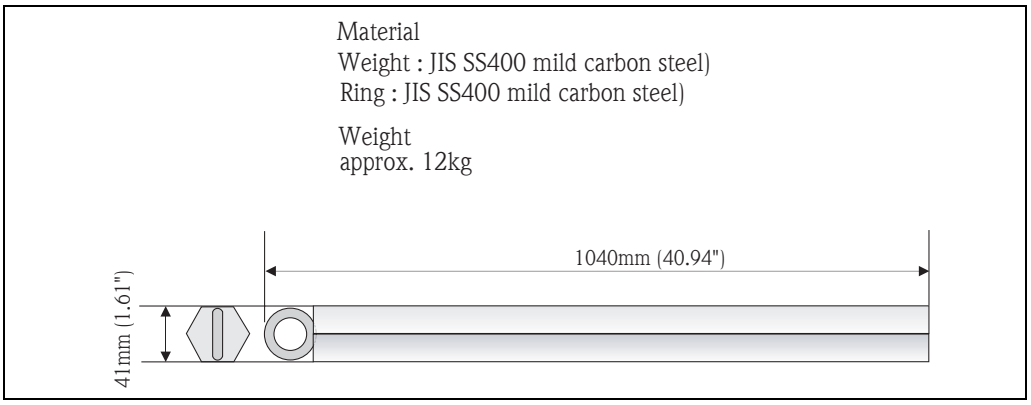

Wire hook, Top anchor mounting attachment option: D

Wire hook

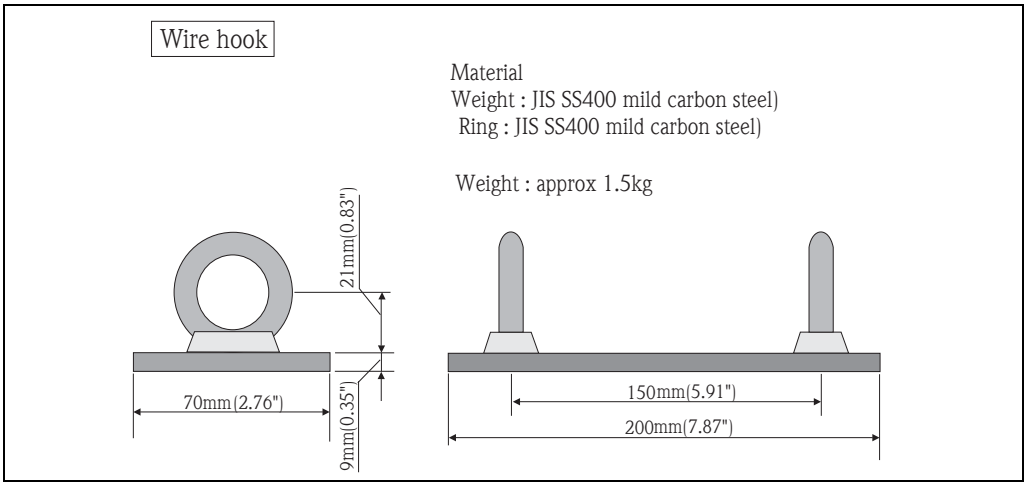

Actual tensioning can be completed with SUS316 stranded 3mm diameter tension wire between wire hook and top anchor.

Top anchor

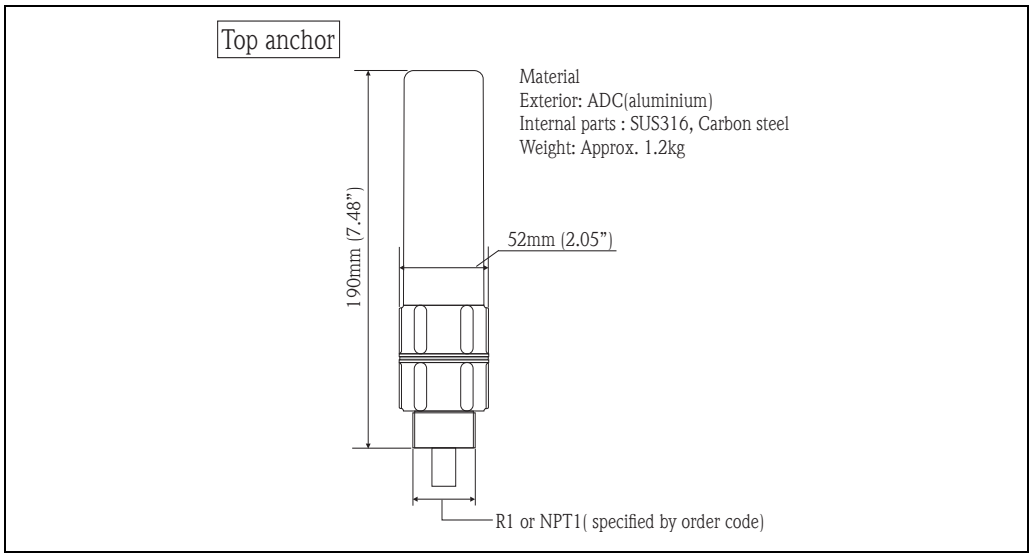

Note!
The standard process connection of the top anchor is R1 or NPT1 threaded connection.

Documentation

Technical Information

TI00452G
Proservo NMS5

TI008N
Promonitor NRF560

TI024N
Digital Transmitter TMD1

Operating Instructions

BA01032G
Prothermo NMT532 (Installation Instructions)

Certificates

Prothermo NMT532	ATEX	IEC	FM	CSA
Average temp.	XA00584G-A	XA00581G-A	Ex461-851-1	Ex462-712-2
			Ex461-850-1	Ex462-771-2

Appendix

Stainless Steel conversion table

The stainless steel material used in products of Endress + Hauser Japan normally have expressions according to Japanese industrial standards, such as JIS or TIIS. Each country or region may have different expressions. The following conversion table contains the expression of equivalent stainless steel material based on the chemical composition and mechanical properties.

Country	Standard	Expressions			
Japan	**JIS / TIIS**	**SUS304**	**SUS304L**	**SUS316**	**SUS316L**
Germany	**DIN 17006**	X5 CrNi 18 10 X5 CrNi 18 12	X2 CrNi 18 11	X5 CrNiMo 17 12 2 / 1713 3	X2 CrNiMo 17 13 2
	W.N. 17007	1.4301 1.4303	1.4306	1.4401 / 1.4436	1.4404
France	**AFNOR**	Z 6 CN 18-09	Z 2CN 18-10	Z 6 CND 17-11 / 17 12	Z2 CND 17-12
Italy	**UNI**	X5 CrNi 1810	X2 CrNi 1911	X5 CrNiMo 1712 / 1713	X2 CrNiMo 1712
U.K.	**BSI**	304S15 / 304S16	304S11	316S31 / 316S33	316S11
U.S.A.	**AISI**	304	304 L	316	316L
U.E.	**EURONORM**	X6 CrNi 1810	X3 CrNi 1810	X6 CrNiMo 17 12 2 / 17 13 3	X3 CrNiMo 17 12 2
Spain	**UNE**	X6 CrNi 19-10	X2 CrNi 19-10	X6 CrNiMo 17-12-03	X2 CrNiMo 17-12-03
Russia	**GOST**	08KH18N10 06KH18N11	03KH18N11	_	03KH17N14M2
-	**ISO**	11	10	20	19
-	**ASME**	S30400	S30403	S31600	S31603

Note!
Since each standard carries its own mechanical and scientific definition, some expressions may not have the straight conversion from the Japanese standard. Consult with the local authority or legislature to ensure the proper comparision with the applied standard prior to determining specification.

Japan

Endress + Hauser Yamanashi Co., Ltd.
862-1 Mitsukunugi Sakaigawa-cho
Fuefuki-shi Yamanashi,
406-0846 Japan

Phone: ++81 55 266 4964
Fax: ++81 55 266 4969
http://www.endress.com

Endress+Hauser

People for Process Automation

TI 00049G/08/EN/14.11
71136678
FM+SGML 6.0