BricsCAD Mechanical

Basic Training

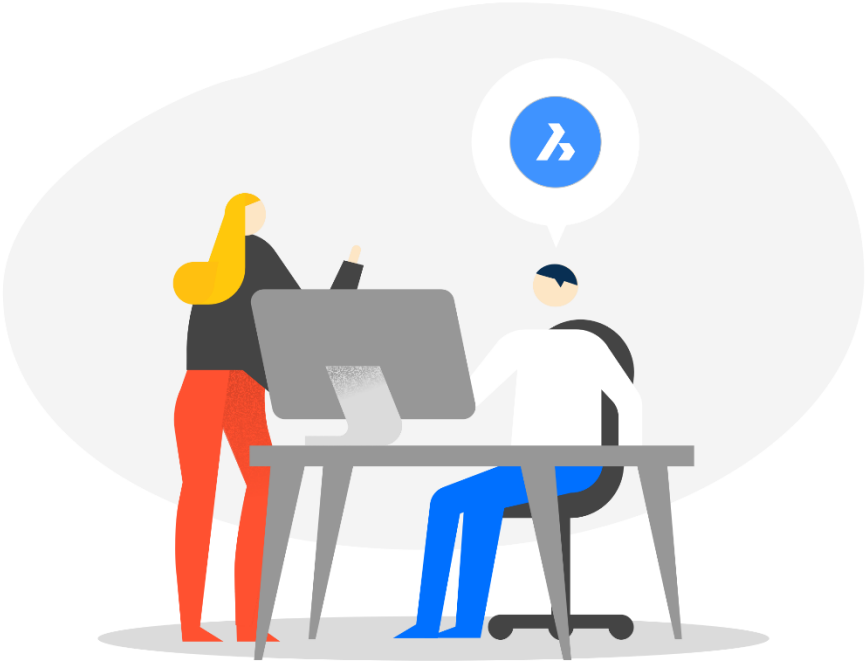

Contents

Introduction

1. This step-by-step training program includes and uses a model dataset. The models can be found on Bricsys 24/7 under the project Bricsys Partner Area, under the folders Sales & Training tools > BricsCAD Mechanical Training > v21.
2. For some of the exercises you will need the Communicator extension to import the models used. This can be found on the Bricsys webpage under “Products”. If you do not have the Communicator installed, you can open a previously imported file under the subfolder “Steps” of the relevant exercise.
3. All of the exercises uses the metric unit mm unless; otherwise is specified, or if an imported component uses another unit.
4. Be mindful of what selection modes you have active. We will be using: Select edges (1), Select faces (2), Select detected boundaries (4).

Direct modeling

1. Launch BricsCAD.
2. In the Launcher screen select the Mechanical workspace.

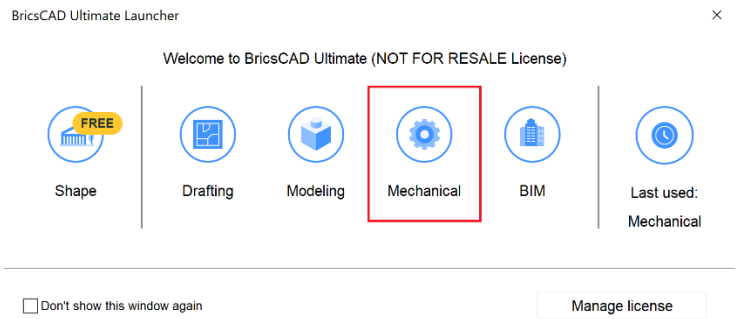

3. Create a new drawing: Click the small BricsCAD symbol in the top left of the start Screen -> New wizard (NEWWIZ) -> Start from Template -> Mechanical-mm.dwt. Here you get more options for starting a new file than you would by simply creating a new drawing.

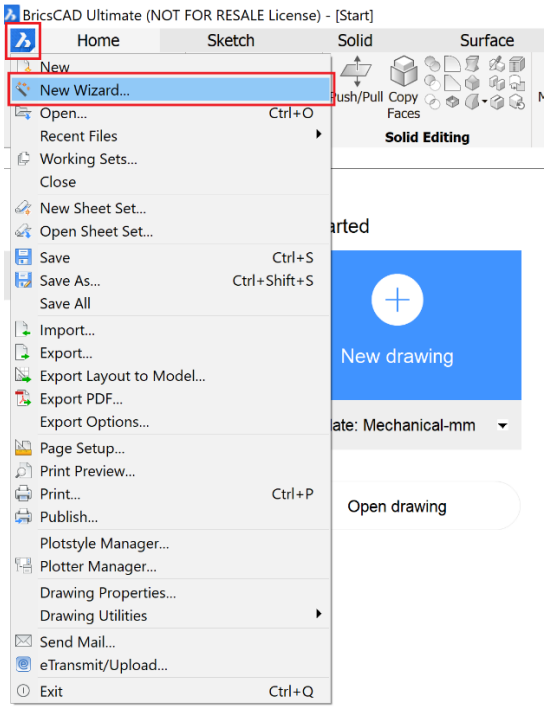

4. Set up new values for some variables: **SNAPTYPE=0** (snap to grid), **SNAPMODE=1** (can also be accessed on the statusbar), **GRIDMODE=1**, **OrbitAutoTarget=1** (for rotation around center of the current screen).
5. Switch current visual style to **2dWireframe** using **VISUALSTYLES** command.

6. Call **Polyline** command (PLINE) and draw a polyline contour, by snapping to the grid:
   Start point (0,0,0) - second point (0,200,0) (1) - segment L=100 (2) -
   snapping to the grid under 135° (3) - segment L=100 (4) -
   snapping to the grid knot (5) - Use the "Close" dialogue option of polyline command (6).

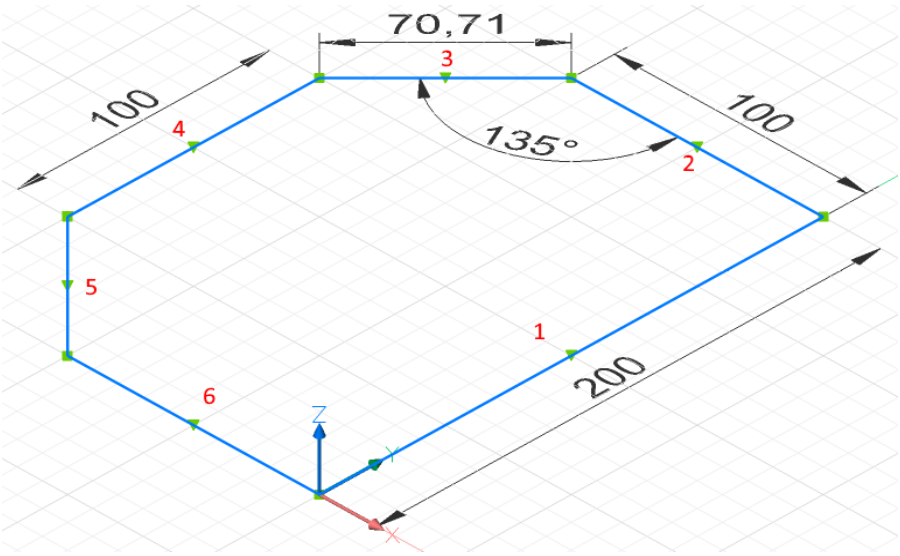

7. Set **SNAPMODE=0** and **GRIDMODE=0**, and set back **VISUALSTYLES** to "**Mechanical**".
8. Activate the **DMEXTRUDE** command and extrude the sketch downwards by **20mm**, and change the color of the base to Green in the Properties panel.
9. For the next steps we will be sketching on the solid itself. Therefore you should have **Dynamic UCS** active. It can be toggled with the **F6 key**, or click **DUCS** on the status bar in the bottom right of the BricsCAD window. Now when the DUCS is active it will align with any surface you try to sketch on. To temporarily lock on to the surface you want to sketch on, you can hover over the surface and press the **Shift** key and you should see the surface become highlighted with a darker blue colour.
10. Activate the **RECTANGLE** command and create a rectangular contour **20mmx60mm**, placed centered against the back edge, as seen in the picture below. This is for a vertical stand so **DMEXTRUDE** it upwards by **150mm**.

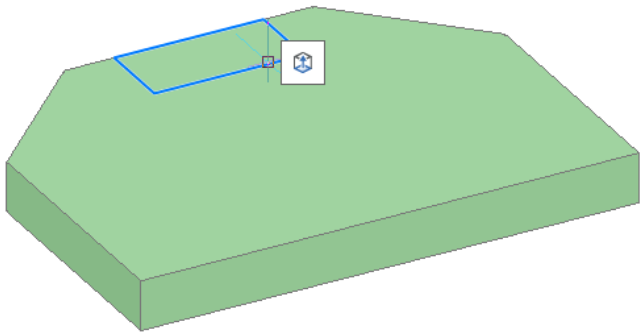

11. Create **CIRCLE** on the vertical face. Snap to the midpoint of the edge, then snap on to the corner of the edge. Then extrude it **130mm**, perpendicularly away from the vertical stand.

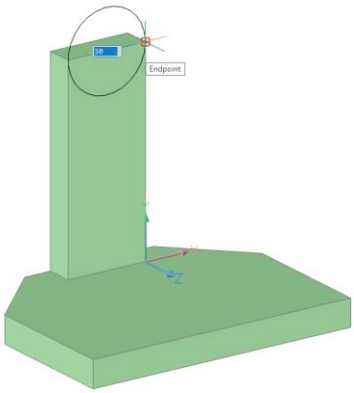

12. Now the goal is to make a flush connection between the pillar and the cylinder. For this make sure you have “Prioritize Selection of Faces” active. (SELECTIONMODES=2) Select the half circle face at the back of the cylinder, and DMEXTRUDE the half circle to be flush with the back face as seen in the picture below.

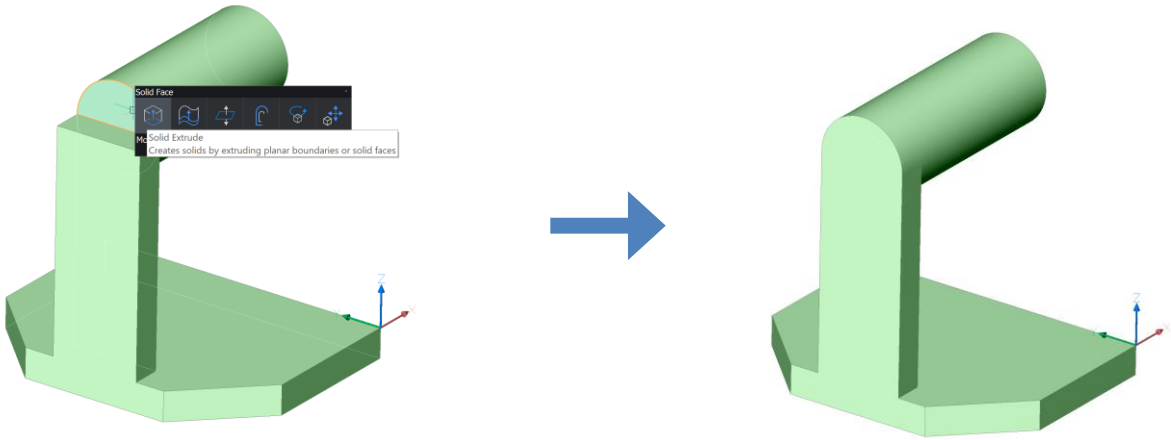

13. Turn on Design intent "coincident planes". You can use the command **DMRECOGNIZE** and set its value as **2**, or find the design intent settings on the ribbon under the **Solid** tab. This option will recognize any coincident planes on the model. To test this, select the face on the front of the cylinder. Then activate Push/Pull (**DMPUSHPULL**), and see how the model reacts to this. The bottom of the model should also react to the changes made to the cylinder. Undo any changes made to the geometry in this step before moving on.

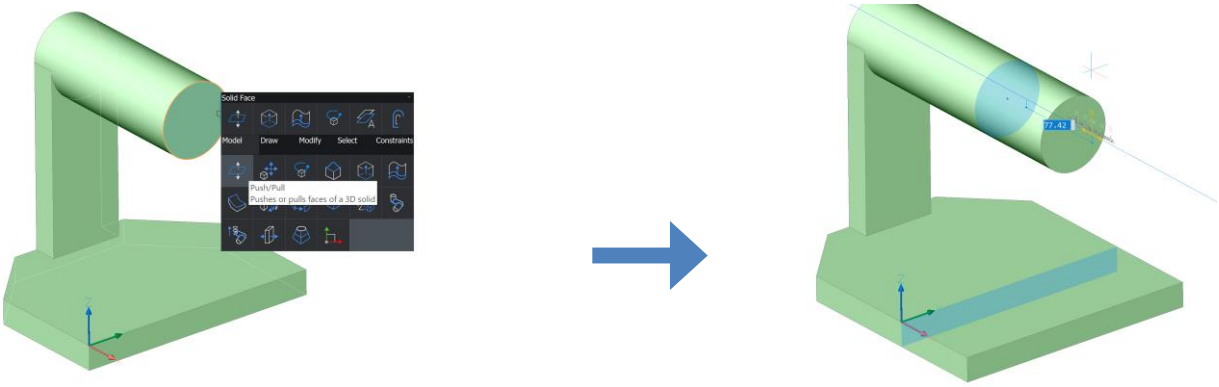

14. Hover over the circular face and choose the **OFFSET** tool from the Quad. Offset the circle inwards by **10mm.**

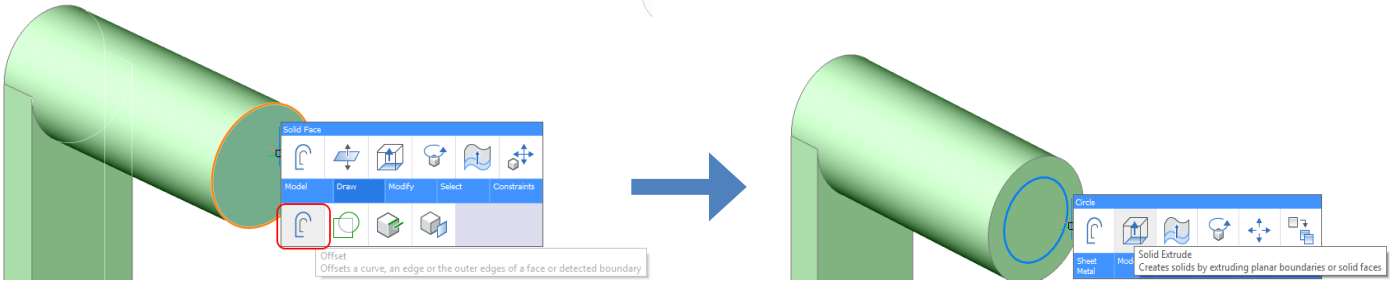

15. Hover over the circle and extrude a hole through the whole cylinder using **DMEXTRUDE** command.
16. Try turning on Design Intent "Coaxial surfaces" option. (DMRECOGNIZE = 34) Activate the **DMMOVE** command and select the center of the cylinder hole. Try moving it up and down and see how the cylinder and the hole share the same center while being moved.
    If you are not able to move it as seen in the picture below, try holding the Shift key while the command is active and while moving the hole. This way the movement will lock on to one of the 3 coordinate axes.
    Undo any changes made to the geometry in this step before continuing.

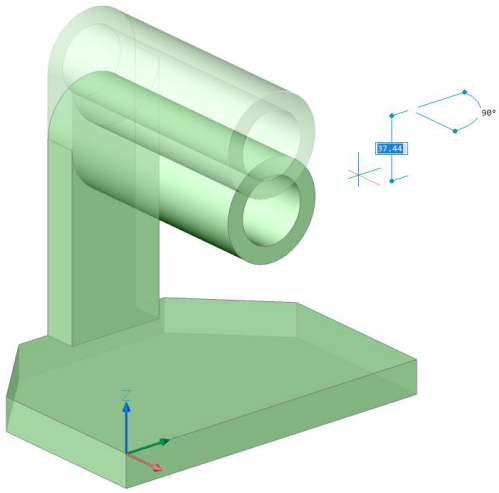

17. Select the two vertical edges on the front of the base, as shown. Then create fillets by activating **DMFILLET**. Give the fillets a radius of **25mm**.

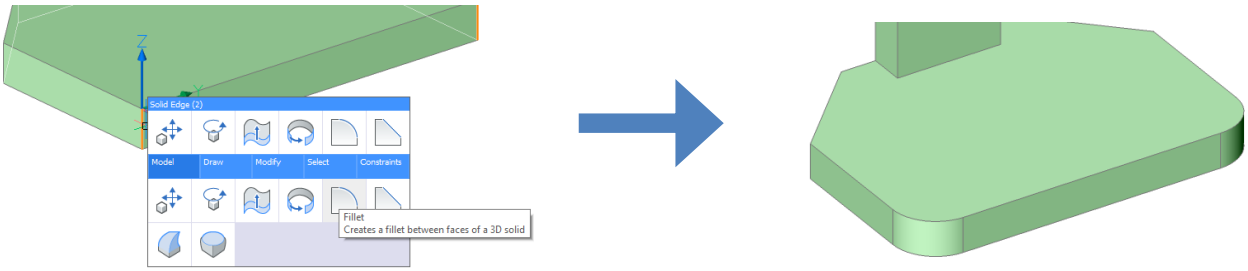

18. The goal of this step is to create 2 holes on the base of the model, sharing the same center as the fillets we just created. To secure this placement of the holes, check your ESNAP settings. Right click **ESNAP** on the status bar in the bottom right of the screen. There you should enable the **Center** option. You will know is enabled if there is a rectangle around the symbol of the center snap option as seen below.

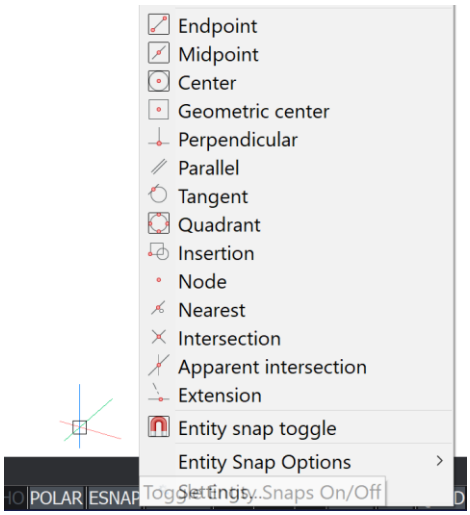

Now activate the **CIRCLE** command and hover over the top face of the base. Remember you can press Shift to lock your sketch to this face. Now hover your cursor over the rounded edge of the fillet and you should see the snapping point of its center show up. As seen below.

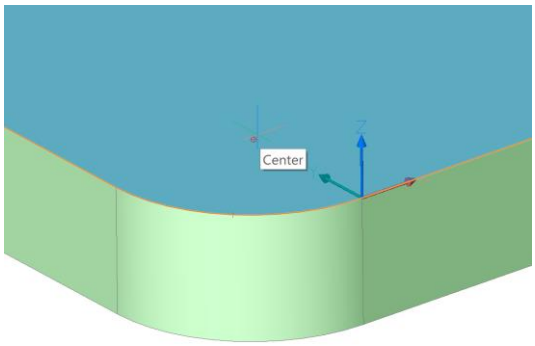

Now click to select the center as the base point of the circle. Give the circle a radius of **10mm**. Do the same for the other side of the base so you end up with 2 circles.

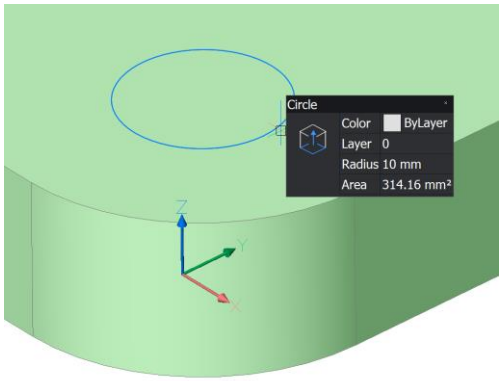

19. Use the command **DMEXTRUDE** to create 2 holes from the circle sketches.

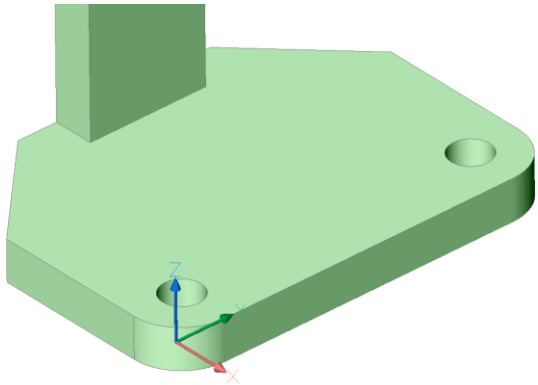

20. Select the circular top edges of the holes. Then activate the **DMCHAMFER** command to create chamfers. Give the chamfers a distance of **5mm**.

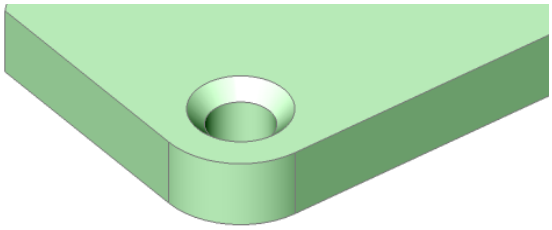

21. Draw a **50mmx20mm** rectangular profile under the part's head, placed centered against the vertical stand, as seen in the picture below. **DMEXTRUDE** the profile vertically but do not enter any value. Instead, through the command line dialogue select the "**Set Limit**" option. Then select the outer cylindrical face of the head as the limit. You should see the extrusion adapt to the shape of the cylinder.

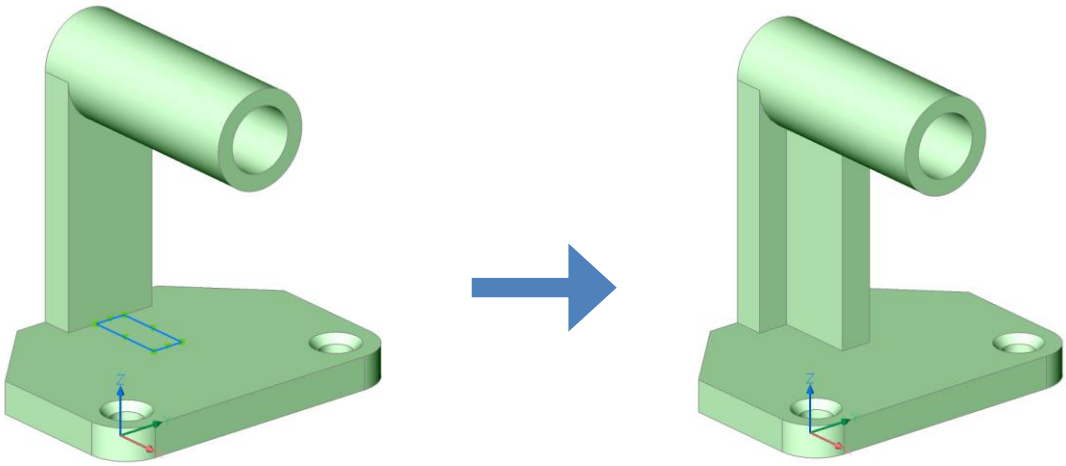

22. Select the 2 large sides of the rib you just made. Activate the PUSH/PULL tool on the Rib, and you will see that it still adjusts to the shape of the cylinder even if you change the width of the rib.

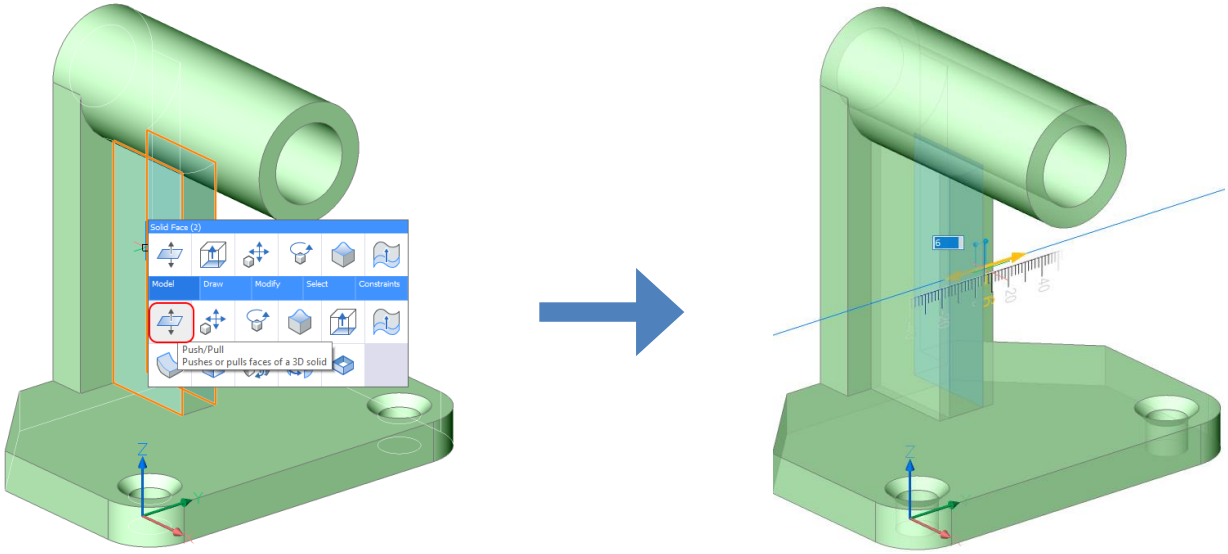

23. Constraints: Apply **DMFIX3D** to the back face, a fixed constraint. Then place **DMRADIUS3D** to one of the base's holes, a constraint to decide the radius of the hole. When placing the constraints, accept the values that are suggested, do not type in any new values for the constraints.
Then turn on the Design intent "Equal radius" option. (DMRECOGNIZE = 98) The design intent will allow the 2 small holes to share the same size as they share an equal radius. Meaning that if the constraint that determines the hole size it will change the size of both holes.

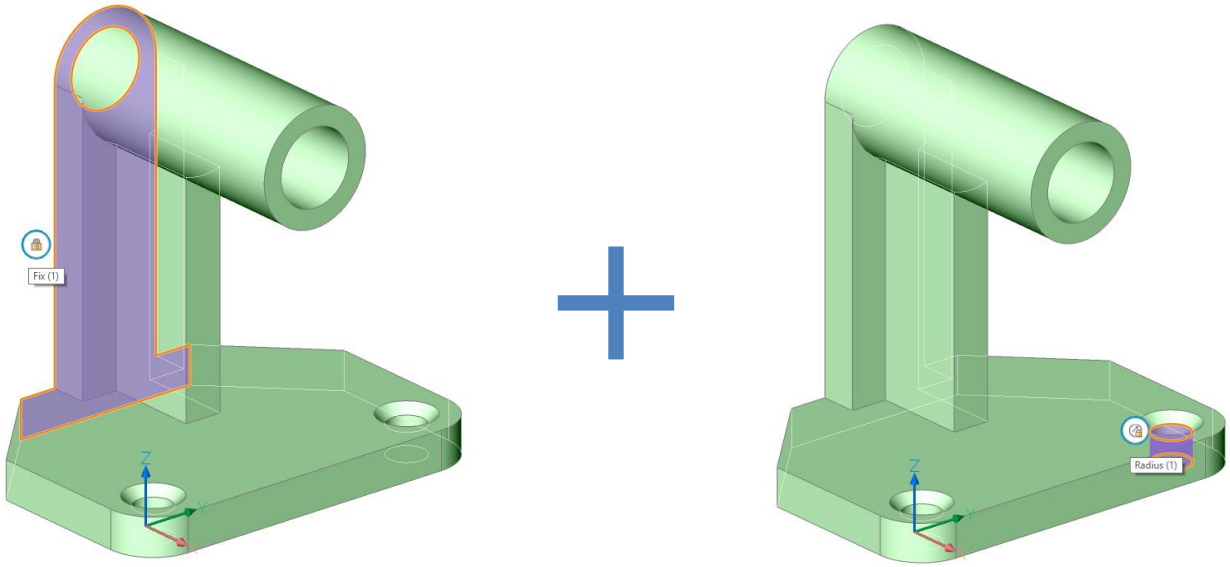

24. Create planar angle constraint with the **DMANGLE3D** command. Select the back face and the front face of the rib. As seen in the picture below. When the angle is first placed it might work in a different direction that we want. To ensure that it works in the correct direction we can set a reference. In the command line dialogue, select the “Set Reference Entity” option. Then select the horizontal edge at the back of the base, as seen in the picture below. With this line as the reference it will orientate the direction of the angle constraint correctly. Then accept the angle value as 180°.

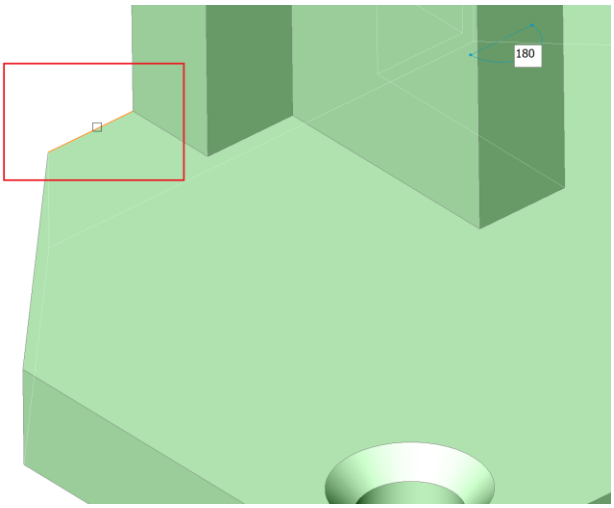

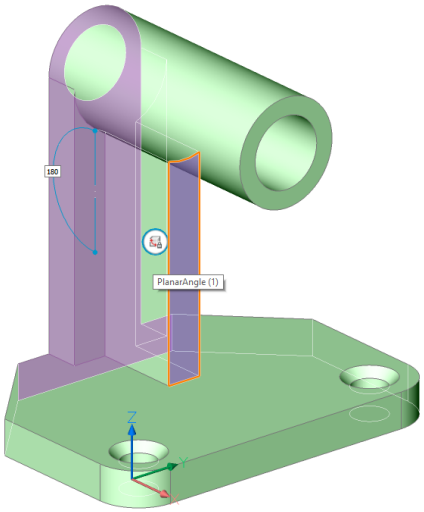

25. Open the **Mechanical browser** panel. Find the angle constraint and change the value by 10° to create an upwards incline as seen in the next step.
26. Select edges and activate the **DMFILLET** command to create fillets as seen below. Give the fillets a radius of **3mm**. You can do them one by one edge, or you can select them all at once. To help with the selection you can hover over a face, and through the **QUAD** you can find different selection options. Such as the one highlighted that allows for selection of all edges around the face.

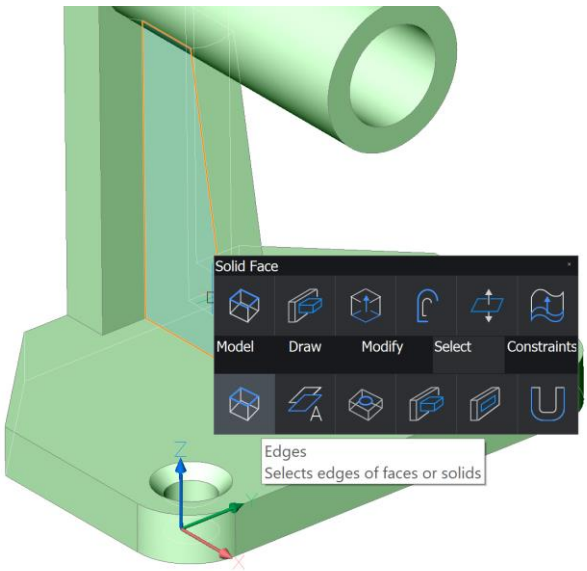

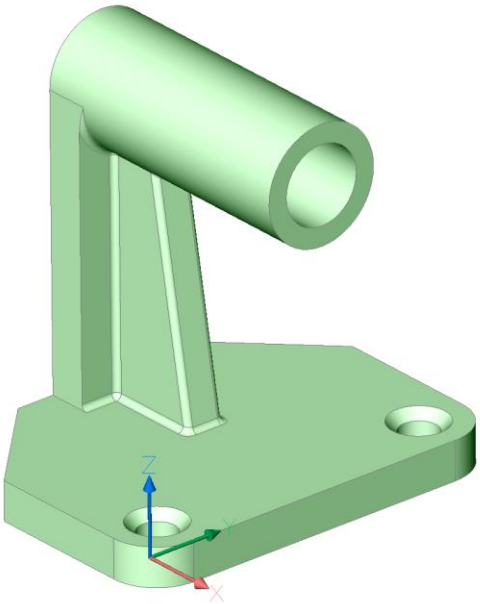

Surface Modeling

1. Create a new drawing: File-> New (QNEW).
2. Draw a **RECTANGLE** with the fillet option in the command line. Give the fillets a radius of **20mm**. After accepting the fillet value, type 0,0,0 and accept. This will start the rectangle in the origin point of the drawing. Then give the rectangle a width of **200mm** in the **X direction**, and **250mm** in the **Y direction**.
3. Draw a **LINE**, as shown between the endpoints of the radii. Then with boundary detection active (**SELECTIONMODES = 7**), hover over the center of the sketch. From the QUAD create a region as seen in the picture below, now you will have created a surface.

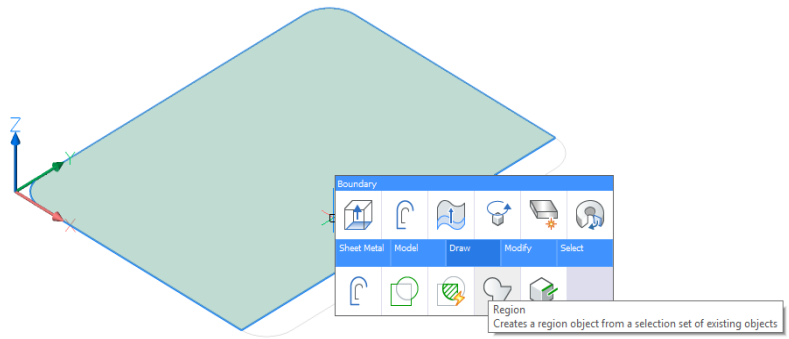

4. Hover over the region and extrude surface through the QUAD. Or use **DMEXTRUDE**, and in the command dialogue set “Mode” to “Surface” and extrude the outside edge upwards with a height of **60mm**, and outwards with an angle of **40 degrees**. To switch between the height and angle value, use the **Tab** key on your keyboard.

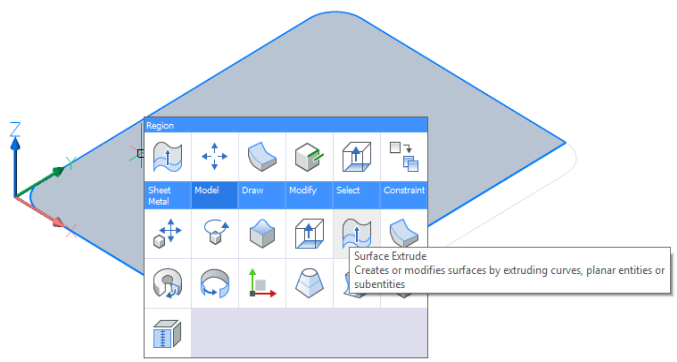

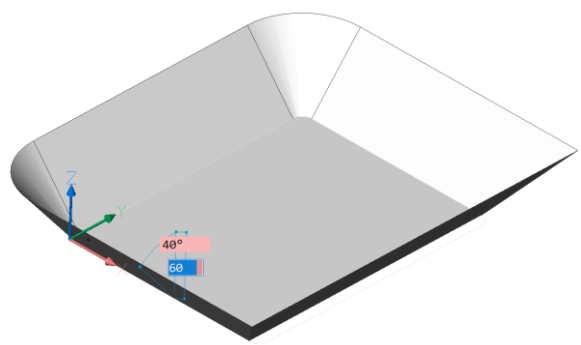

5. Stitch two surfaces. Select all with **Ctrl+A** and call **DMSTITCH**. During this exercise the surfaces should always stay as one surface, so if the model consists of several surfaces at a later stage, you can use DMSTICH to combine them again.

6. Select the base face and rotate it around the back edge by using **DMROTATE**. Then complete the rotation by snapping it to the top corner as shown below.

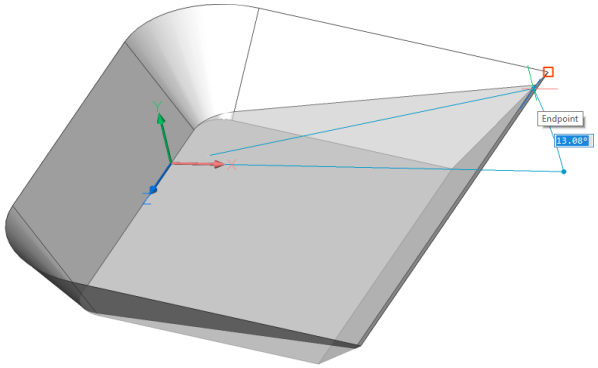

7. Create POLYGON (center-side) with 4 sides and Size = 30.

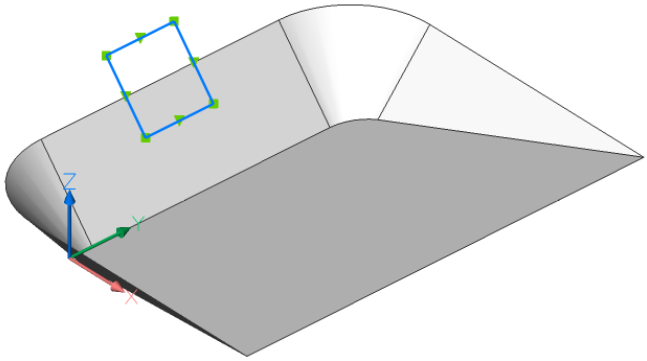

8. DMEXTRUDE polygon with slice option (use the 3rd Ctrl modifier). Delete sliced piece of the surface.

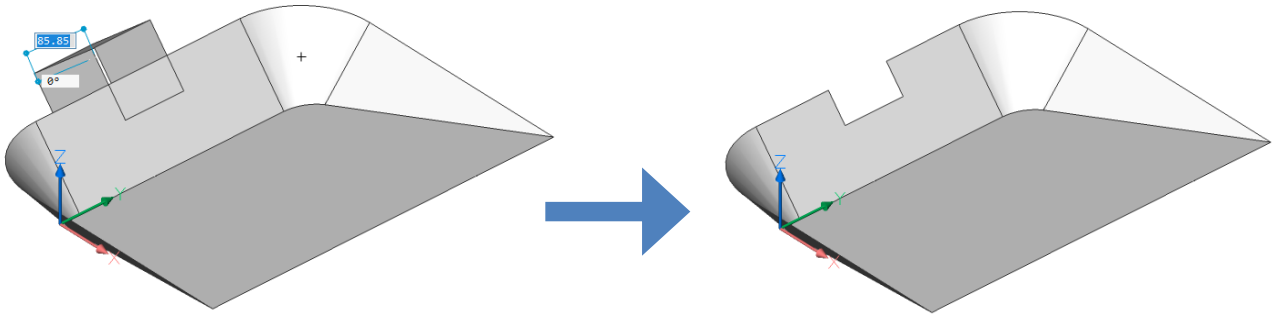

9. Select the three edges as seen highlighted below. You can do this by manually selecting each edge, or you can use a selection window.

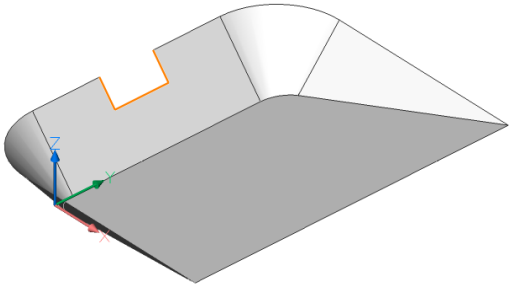

10. Activate the **DMEXTRUDE** command on the 3 selected edges, use the command line option "**set direction**" and then select the **X-axis**. Extrude it with a distance of **250mm** to create a handle.

11. Close the end of the handle. Select one of the vertical side edges and use **DMEXTRUDE** with the surface option and snap it to the opposing edge as seen in the picture below.

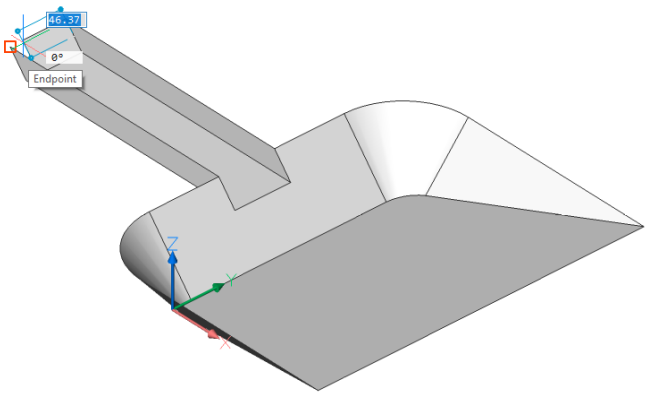

12. Select all handle's faces and activate the command **DMROTATE**. Rotate the handle upward around the back edge of the pan, with a value of **12 degrees**.

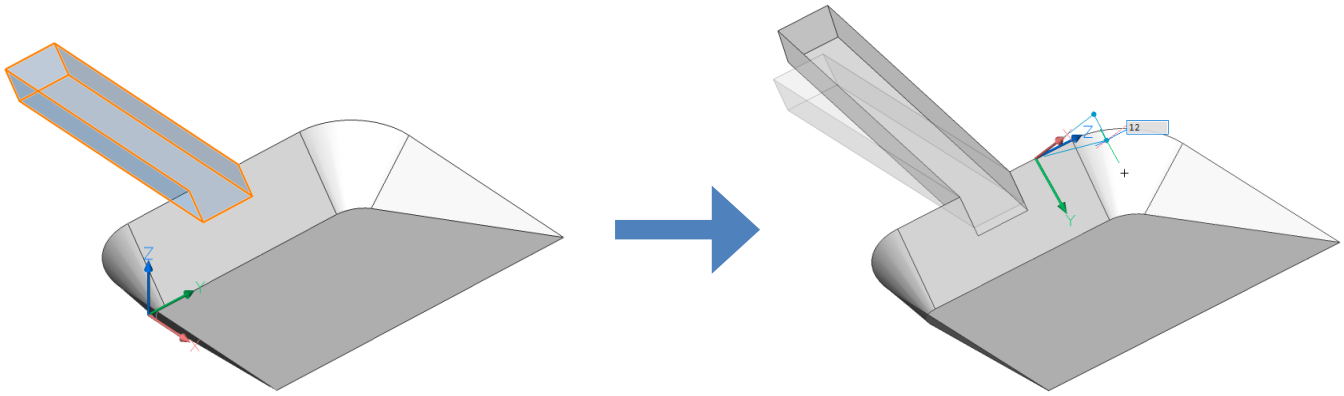

13. Select all handle's edges and activate the **DMFILLET** command. Give the fillets a radius of **6mm**.

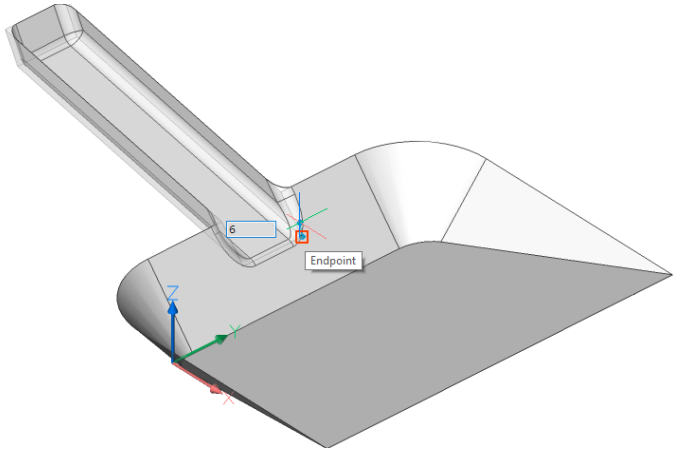

14. Select bottom face edges of the pan and activate the **DMFILLET** command. Give the fillets a **25mm** radius.

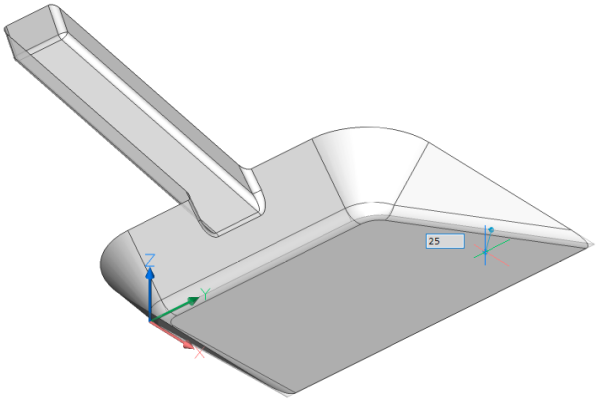

15. Now the Dustpan should still be consisting of one surface, if not use the **DMSTITCH** command to make it so. Select the surface and activate the **DMTHICKEN** command, and give it a value of **2mm**. This will turn the surface into a thin-walled solid.
16. Open the **Properties panel** and change some of the settings for the model. Try changing the color and transparency settings and see how the model is affected.
    For example change the colour to **green** and the transparency to **50**.

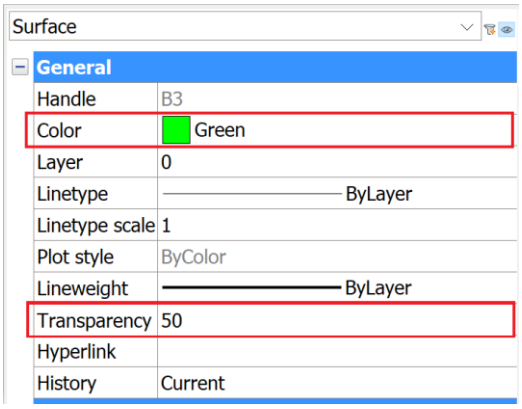

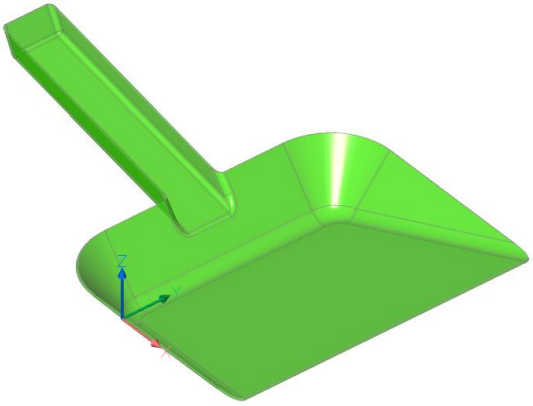

3D Constraints

For this exercise download the entire folder through Bricsys 24/7, you will need to locate the file in your local folder system to import it into BricsCAD.

1. Create a new drawing: File-> New (QNEW).
2. This exercise requires the “Communicator” extension. Type in the command LICENSEMANAGER and control that you have the Communicator installed. If not, it can be downloaded from the Bricsys webpage.
3. Import the file (IMPORT) **3_Support de Commande 841.step**. If the model is not visible you might have to Zoom Extents. (Double click middle mouse button, or find the option on the ribbon on the Home tab under the Navigate section. The LookFrom tool can also be used)
   It is found as **Step_1.dwg** in the folder **Steps** for this exercise.

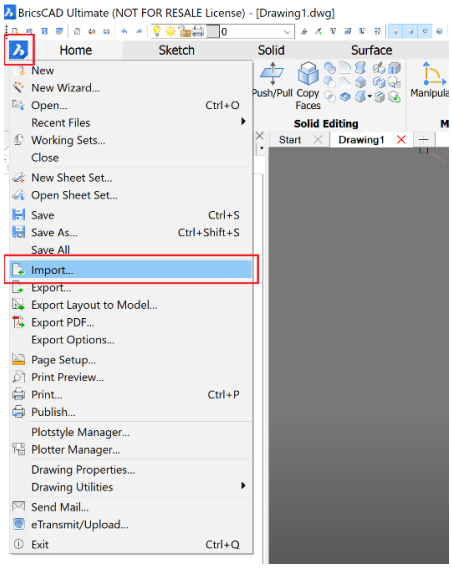

4. Select the entire model and change its color to **61** in the properties panel.
   If you are having troubles with this step your model might have been imported as a block reference. Hover over your model and you should see in the QUAD if it is called a block reference or not. If it is you can activate the **EXPLODE** command and apply it to the model. Then you will be able to change the colour of the model.

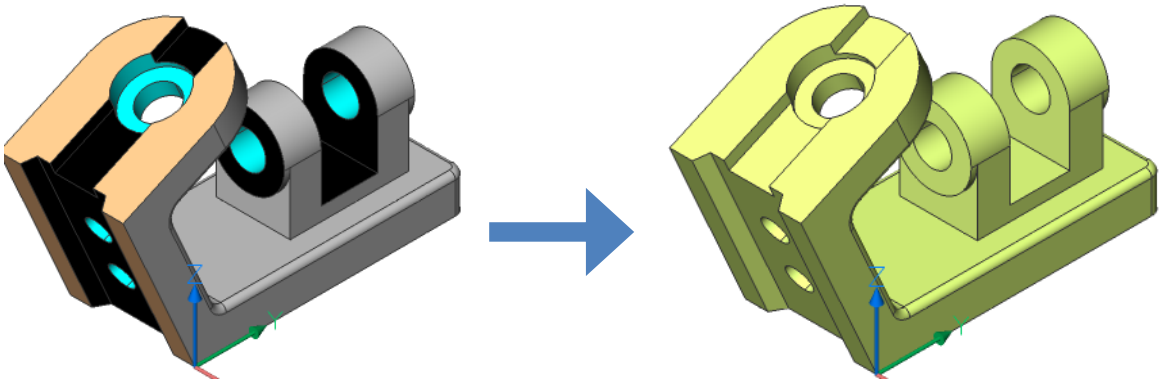

5. Before modifying this model it can be useful to remove certain features of it.
   Hover over the largest radius on the model. Through the QUAD go to the "**Select**" tab and select the "**Same or Less Radius Fillets**" option. Then all the radii should be selected, and you can delete them.
   Then hover over one of the "Depressions" of the model. Through the QUAD go to the "**Select**" tab and select the "**Depression**" option. It should select the whole depression feature so you can delete it. You might need to do this for each of the depression features, a total of 3 times.

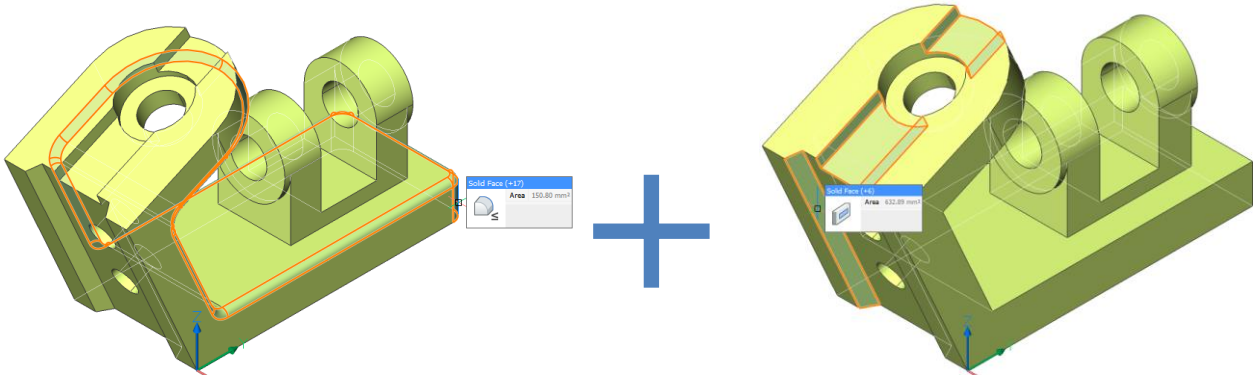

6. Create distance constraint by activating the **DMDISTANCE3D** command. Apply it to the Bottom of the model, then to the top of the base and give it a value of **15mm**. This will control the base Height.

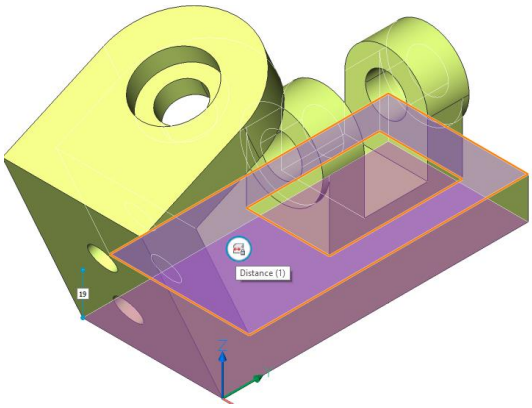

7. Create two more distance constraints the same way. This time apply it to the other "walls" of the model, as seen below. Change them to **15mm** also.

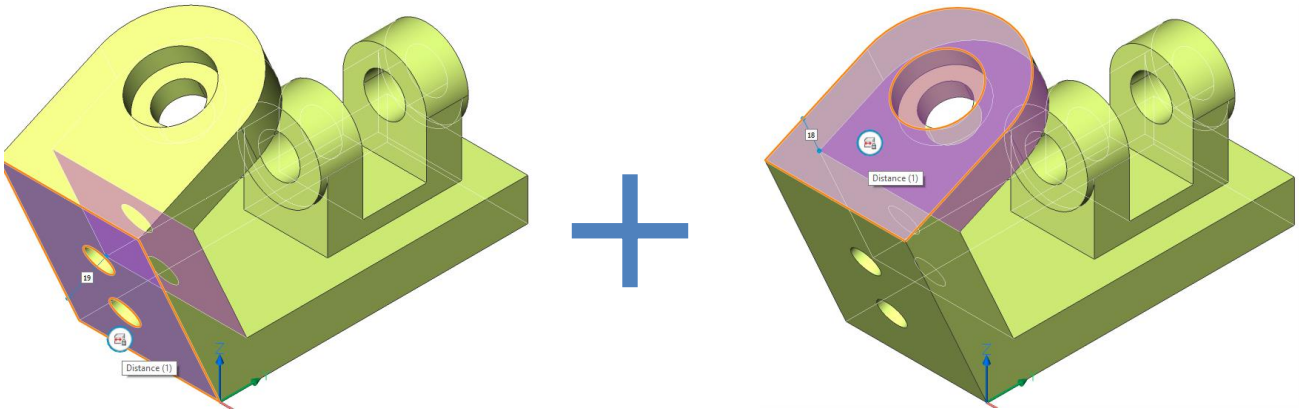

8. In the **Mechanical browser** panel, right click on the root node as seen below. Then select the sub option "**Add new parameter**".

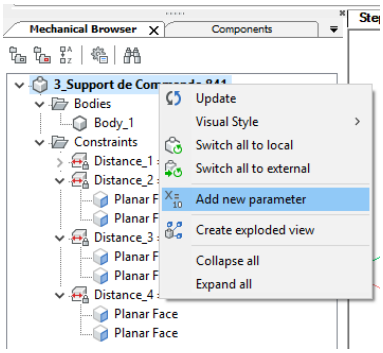

OR

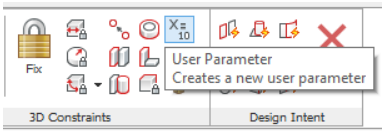

After creating the parameter, select it. When it is selected you will get the ability to modify it at the bottom of the Mechanical browser panel. Change its name to "**T**" and give it a value of 15mm.

Parameter	
Name	T
Expression	15
Value	15
Geometry-driven	No
Description	
Exposed	On
Units	

Now we will control the previously created constraints with this Parameter. To do this select the first **Distance** constraint in the **Mechanical Browser**. Then change its expression to "**T**" in the bottom of the **Mechanical browser**. Repeat this for the rest of the Distance constraints. When finished the Mechanical browser should look like the picture below.

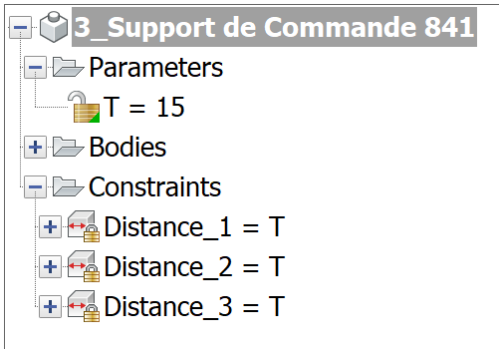

Select the parameter and change its expression to **18** and see the model change. Then change it to **25** and see the model change. Undo these changes so they are back at **15mm** before continuing to the next steps.

9. Create an angle constraint by activating the **DMANGLE3D** command. Apply it to the top face of the base and to the angled face, as seen below. Accept the suggested value.

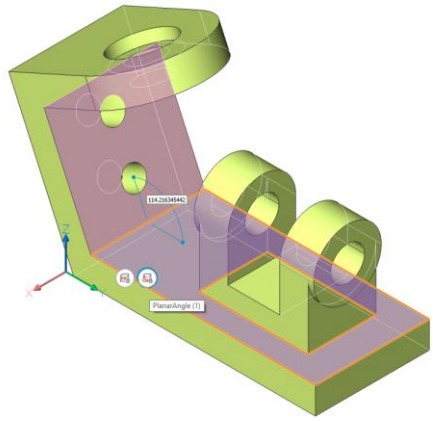

10. Change the angle of the newly created constraint to **120°**. Pay attention to the holes on the angled face, with the angle change the 2 holes will not be perpendicular to the face anymore. This should be fixed.
11. Undo the changes, switch on the Design intent option of perpendicular faces and cylinders. (**DMRECOGNIZE = 24**) and try to change angle again.
    All Design intent options can be found on the ribbon under the **Solid** tab.

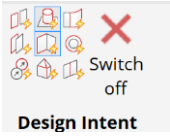

12. Create a radius constraint (**DMRADIUS3D**) for the horizontal circular hole as seen below and activate the Design Intent for **Equal radius**. Try changing the value of the constraint.

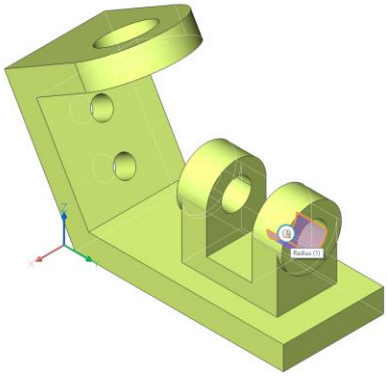

13. Activate Design intent for **Coaxial surfaces**, and use the **DMMOVE** command on the center of one of the holes. Try moving the holes up and down and see how they keep their shared center. Remember to hold the **Shift** key to move it along a specific axis.

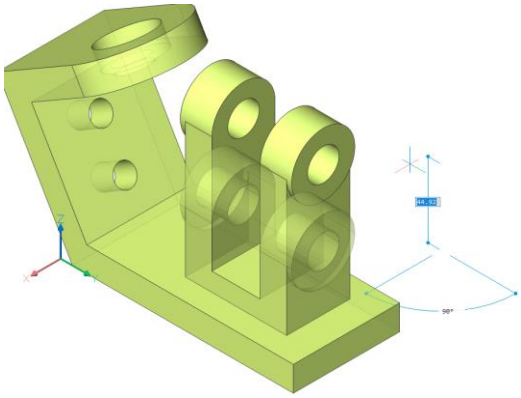

Parameters

1. Open the **rib_constr_no_param.dwg** file.

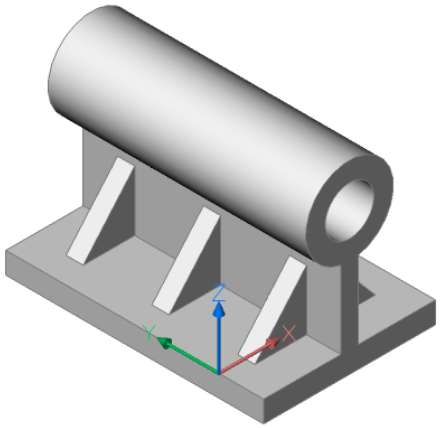

2. Check that "**Coincident planes**" design intent is switched on (**DMRECOGNIZE = 2**).

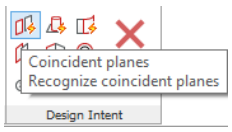

3. <u>Task 1:</u> is the ability to change the thickness of each rib with one value.
4. Create a new parameter (right click on the root node in the Mechanical Browser and select "**Add new parameter**"). Give it the name "**w**" and expression "**20**".

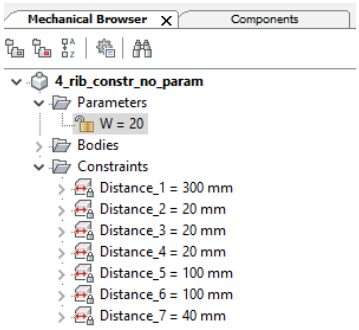

5. Change the expressions for "**Distance_2**", "**Distance_3**" and "**Distance_4**" to "**w**". You can select multiple constraints at once by holding the **Ctrl** key on your keyboard, this way you can change the value of all 3 constraints at once.

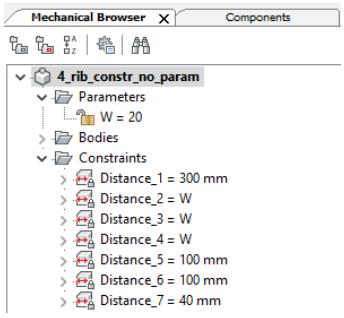

6. Change the expression of "**W**" to "**40**" (all ribs will be modified accordingly - check the opposite side of the model also to ensure this).

7. <u>Task 2:</u> changing the overall length of the part, while keeping the thickness of each rib unchanged and maintaining equal distance between them.
8. Create a new parameter "**d**" with expression "**Distance_1/3**". By adding mathematical symbols such as the "**/**" we can create formulas that will calculate the final expression for us.
9. Change the expressions for "**Distance_5**" and "**Distance_6**" to "**d**".
10. Change the expression for "**Distance_7**" to "**(d-w)/2**".

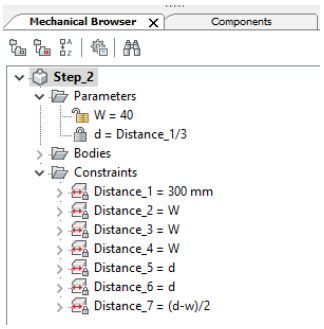

11. Change the expression for "**Distance_1**" to **500**. Observe the result, on the opposite side of the part also.

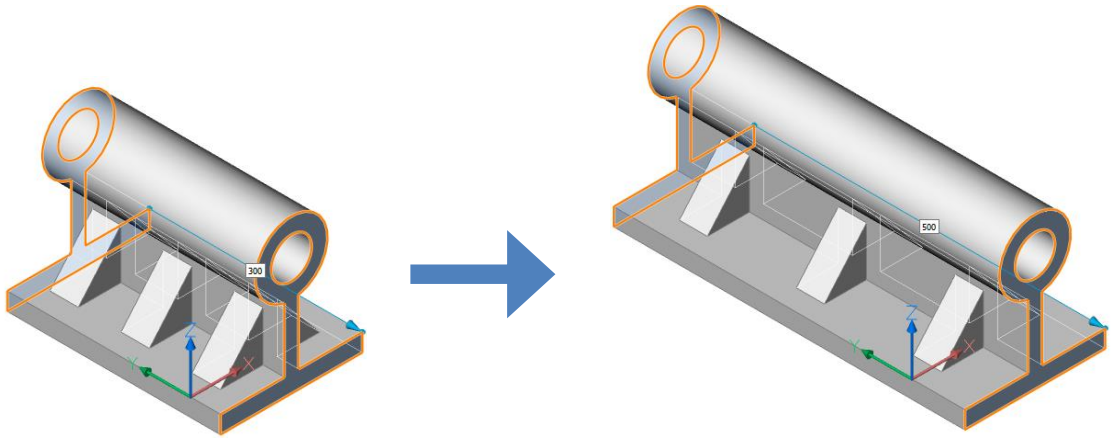

12. Right mouse button click on **Distance_1** and choose "**Animate**" to check the correctness of the constraint. This can be an easy way to control that constraints work and how they work.

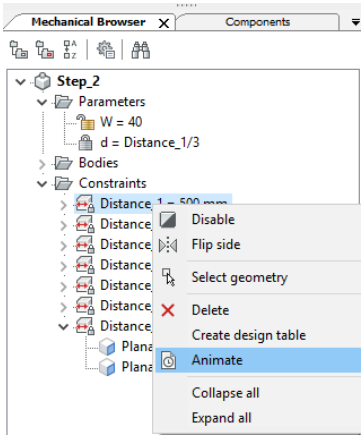

Assembly design

1. Before starting this exercise you need to download the entire folder "**5_Assembly_design**" from the **Bricsys 24/7** panel. Right click the folder and select **Download**.

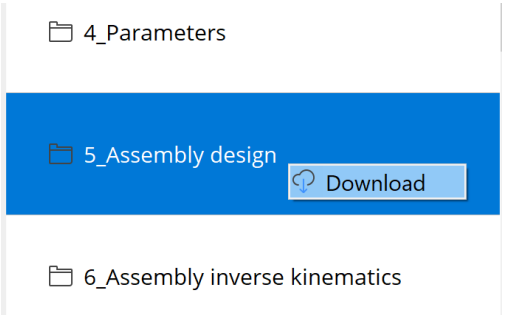

To know where the files are downloaded, call the command **SETTINGS**. In this window open the categories "Program options">"Bricsys 24/7". Under this category you will see the row "Cloud download path". Here is where the files will be downloaded and this is where we will be working with the files from on this exercise.

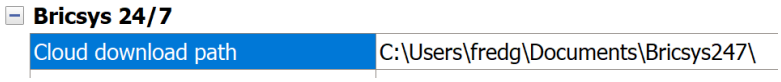

Now open the **Engine_assembly.dwg** file, in the **Mechanical browser** you can see the assembly structure with components, subassemblies and constraints.

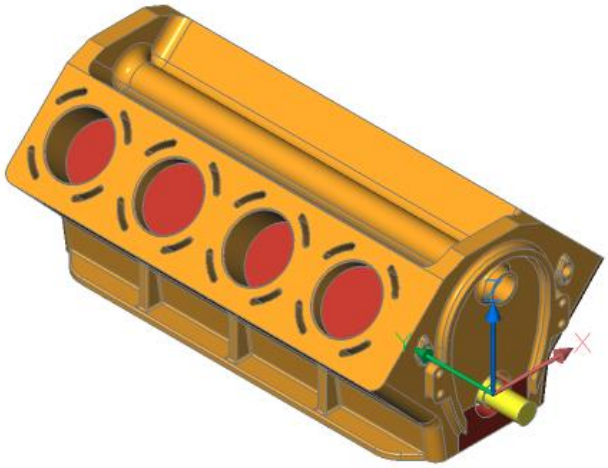

2. Switch to the Layout tab and insert 2 BOM tables (**BMBOM**) tables. One with the **Top** configuration and one with the **Bottom** configuration. You can do this with the command dialogue options of the BMBOM command. You can also access the command from the ribbon under the Annotate tab.

The Bill of Materials is generated based on the models that are placed in the assembly, and the information they contain. The top level table contains all the files placed in this file, while the bottom level table contains all the top level files as well as the sub-files of the top level parts. The following exercises will help highlight the difference between the tables.

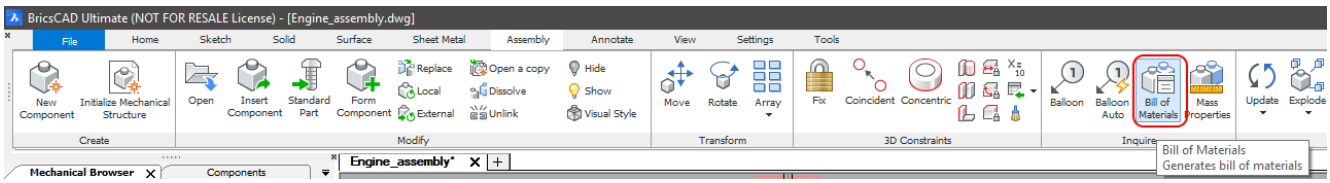

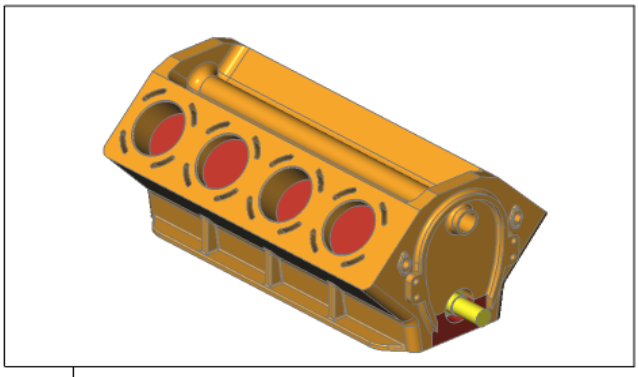

Bill of Materials Engine_assembly		
No.	Component	Quantity
1	crankshaft	1
2	custom_bearing	3
3	cylinder_block	1
4	finger	7
5	ISO 4017xM10 X 1.5x40	14
6	piston	7
7	rod_beam	7
8	rod_cap	7
9	side_cover	2

Bill of Materials Engine_assembly		
No.	Component	Quantity
1	Connecting_rod_assembly	7
2	crankshaft	1
3	custom_bearing	3
4	cylinder_block	1
5	Piston_assembly	7
6	side_cover	2

3. Switch back to model space. Hover over the cylinder block and call the hide tool with the command **BMHIDE**, or through the QUAD as seen below. This way of hiding a component will affect the visibility of it only, and will still be taken into account by commands such as BMBOM and BMMASSPROP, etc.

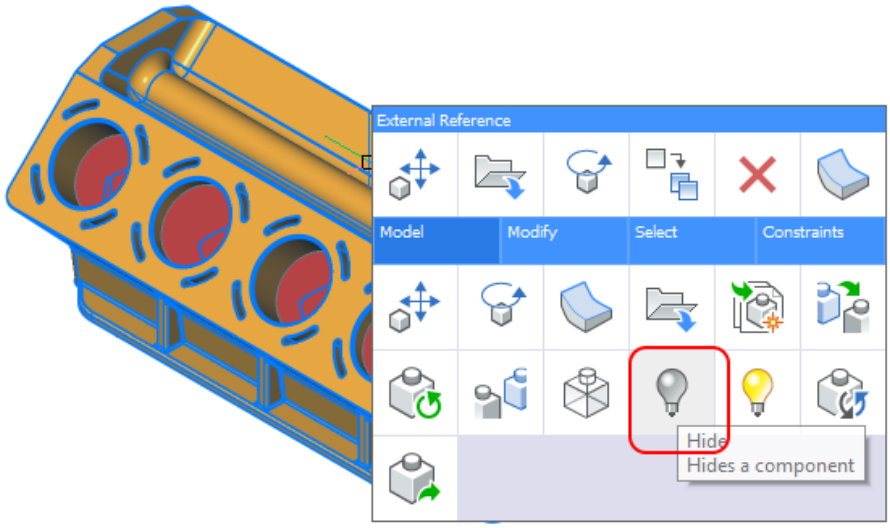

4. Call the **BMINSERT** command and insert the “Connecting_rod_assembly.dwg” and “Piston_assembly.dwg”.

   Like mentioned in **Step 1**, you will be able to find the files in the folder where your Bricsys 24/7 files are downloaded.
   The goal is to place the inserted parts as seen in the picture below.

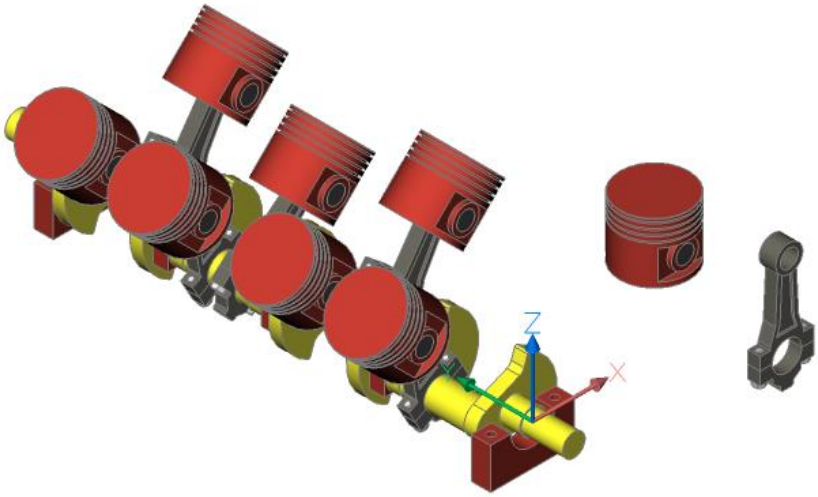

5. Position inserted components with the help of 3D Constraints: **concentricity** and **coincident**. The connecting rod should be placed **20mm** away from the crankshaft counterweight. This can be done by manually using the **DMMOVE** command, or you can apply a **DMDISTANCE3D** with the value of **20**.
   In the picture below you can see the positioning of the components.

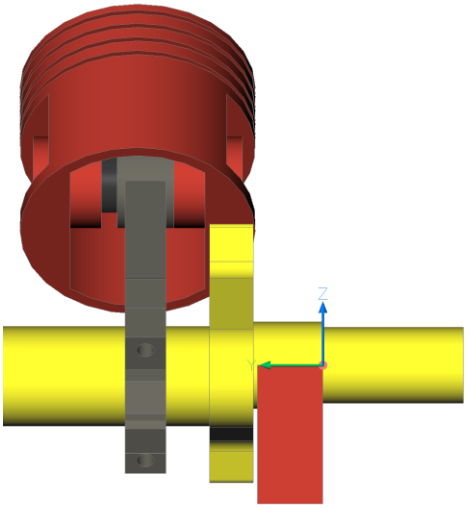

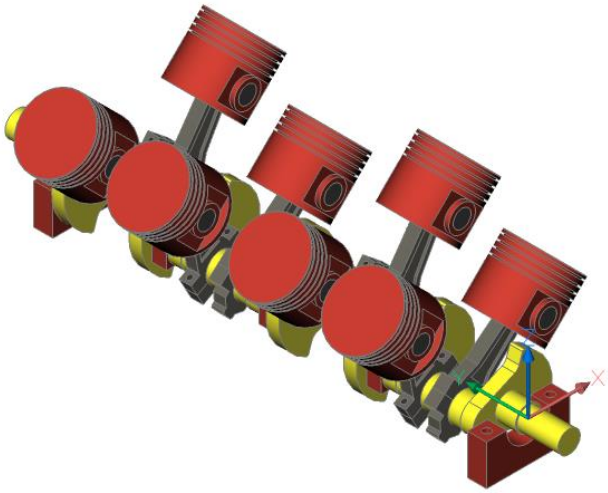

To align the piston and rod correctly you can use **Parallel** constraints (**DMPARALLEL3D**). As seen below you can apply one parallel constraint between the faces of the rod, and one between the top face of the piston head. Be sure to place these constraints to the other piston and rod that shares the same crankshaft center position.

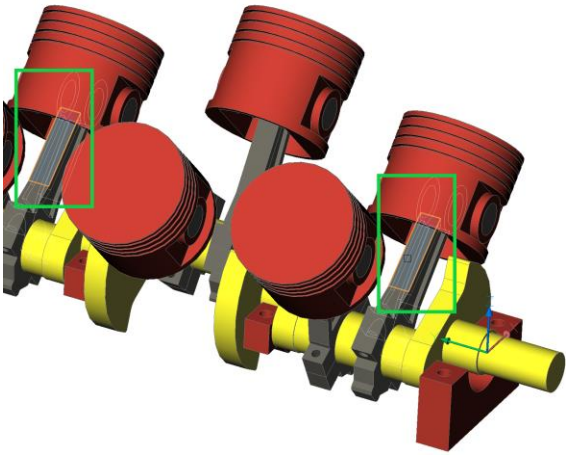

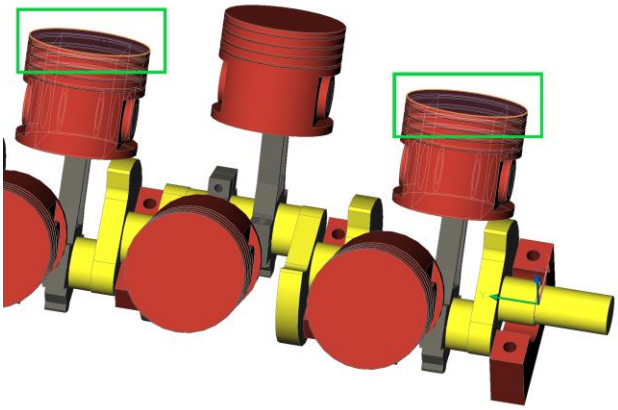

6. Open the **Connecting_rod.dwg** subassembly. You can do this from the file browser or by right clicking the part in the Mechanical browser and then clicking open.
   As you will see when opening it is that there are no bolts here. So we will place them.

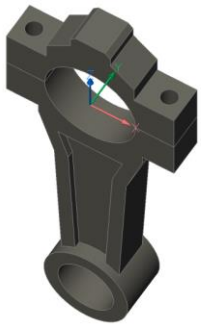

7. Open the **Library** panel and find:
   ISO 4017 HEX Head SCR M10x1.5x40 (You can use the search field and type in **4017**)

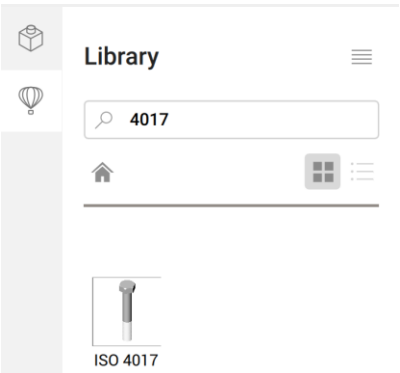

8. Click on the bolt in the Library panel and go to the Properties panel to change the parameters of the bolt. We need **M10x1.5x40**. Underneath you can see where you will need to search for this bolt size.

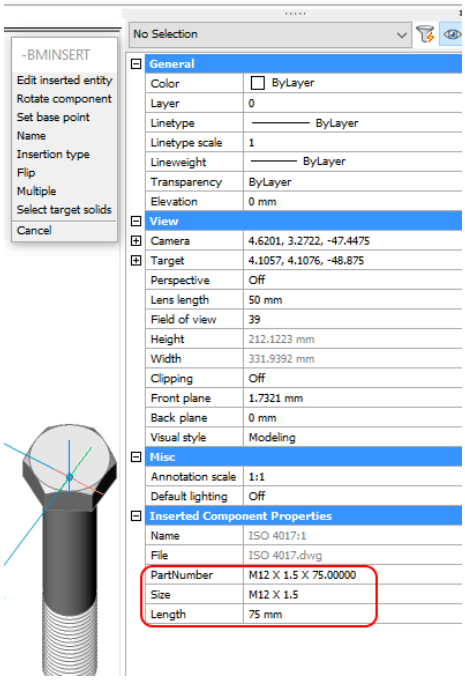

9. Now when the sizing of the bolt is correct we can place it. In the command line dialogue, Use the **Multiple** option. This way we can insert two bolts. Also to help the insertion of the bolts we can hover over the face we want to place them, and press the **Shift** key to lock on to the correct surface. And then we can snap on to the center of the holes to place the bolts.

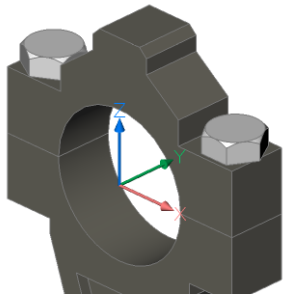

10. Save **Connecting_rod_assembly**.
11. Switch to the main assembly and update it by calling the **BMUPDATE** command. This should now make sure that the newly saved file is updated in the main assembly. Check this by ensuring that bolts are now seen in the main assembly.
12. Go to the library panel and search for **BBRG-30**. Click it and go to the properties panel. There change its sizing to **40mm**. Use the Multiple option to insert 2 bearings, one at each end of the crankshaft.

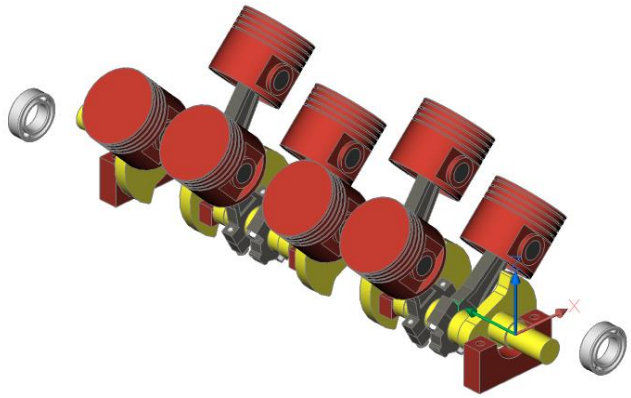

13. Position bearings on the crankshaft by using 3D Constraints: **Concentricity** to place it on the shaft, and **Coincident** with the face of the crankshaft support. Do this in each end for both bearings.

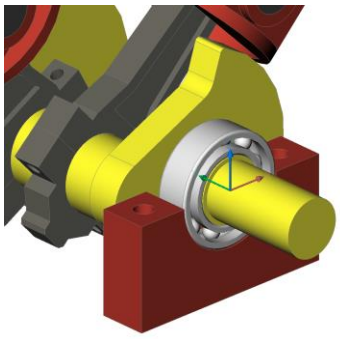

14. Switch to Layout and check BOM tables. If the tables have not changed, call the command **BMUPDATE** on the Entire model. Now you should see the bolts appear in the Bottom level table only. And the bearings should appear in both tables. This goes back to the explanation in **Step 2**.
    To recap, the top level table contains all the files placed in this file, while the bottom level table contains all the top level files as well as the sub-files of the top level parts.

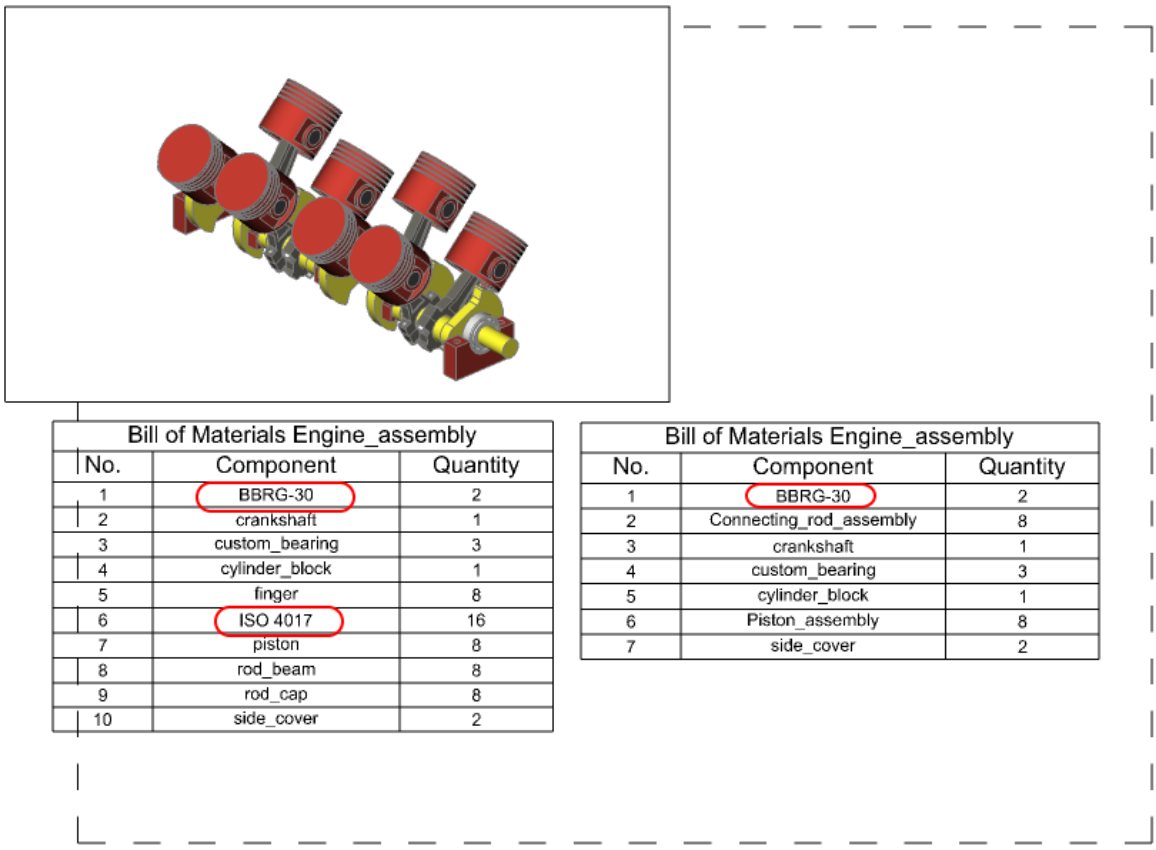

Bill of Materials Engine_assembly		
No.	Component	Quantity
1	BBRG-30	2
2	crankshaft	1
3	custom_bearing	3
4	cylinder_block	1
5	finger	8
6	ISO 4017	16
7	piston	8
8	rod_beam	8
9	rod_cap	8
10	side_cover	2

Bill of Materials Engine_assembly		
No.	Component	Quantity
1	BBRG-30	2
2	Connecting_rod_assembly	8
3	crankshaft	1
4	custom_bearing	3
5	cylinder_block	1
6	Piston_assembly	8
7	side_cover	2

15. Switch back to the model space.

16. Hover over crankshaft and call the rotation tool **DMROTATE**.
    Alternatively you can also use the manipulator for this, clicking and holding the crankshaft for just over 0.25 seconds, or by selecting it and calling the command **MANIPULATE**.
    Then you can use this tool to rotate the shaft.

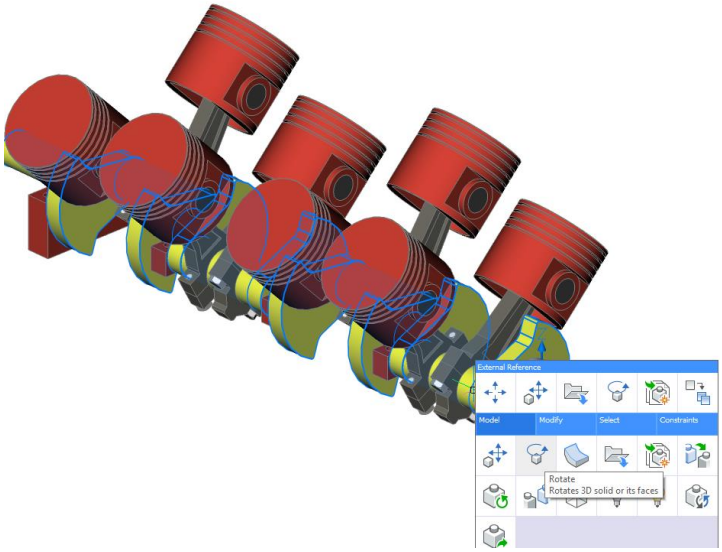

17. If using **DMROTATE**, you need to pick a rotation axis. As a rotation axis choose the **Y axis**.
18. If using **DMROTATE**, pick any start point and rotate the model by using your cursor. This will show the Inverse kinematic capabilities of constrained assemblies.
19. To improve the visual representation you can tune these settings to their respective values.
    DRAGMODEHIDE=1 and **DRAGMODEINTERRUPT=0**.

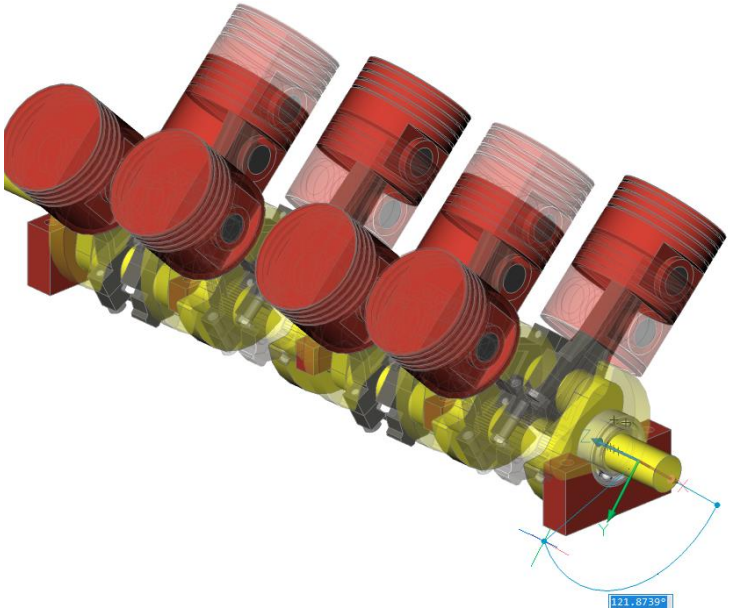

Assembly inverse kinematics

1. For this exercise, download the entire folder and work with the files from the local 24/7 folder where they are downloaded.
   Create a new drawing: File-> New (**QNEW**).
2. Import **Industrial-Robot_BTR.sat** (**IMPORT**). If you do not have the **Communicator** installed you can find the file already imported as a .dwg file. It is found as **Step_1.dwg** in the folder **Steps** for this exercise.

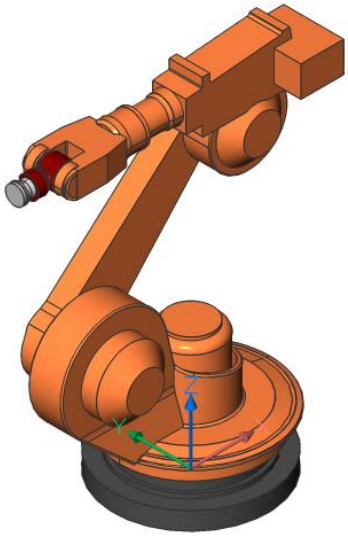

3. Call **DMSIMPLIFY** to simplify imported geometry. This command removes unnecessary edges and vertices, merges seam edges, etc. to clean up imported geometry. It is recommended to always run this command on imported 3D solids.
4. Manually "explode" the assembly with the help of the **DMMOVE** command. Just to separate the parts.

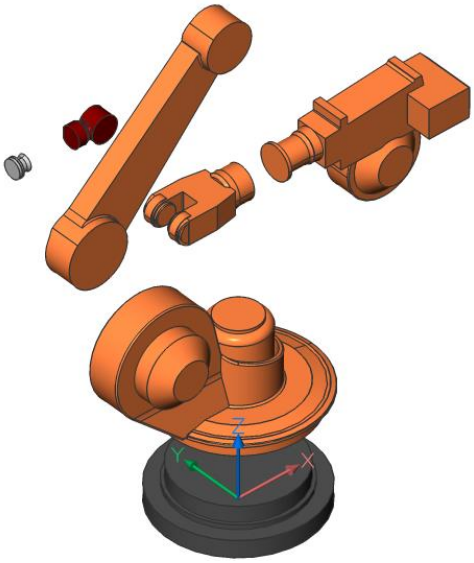

5. Paint solids in different colors by selecting them one by one and altering the colour in the properties panel.

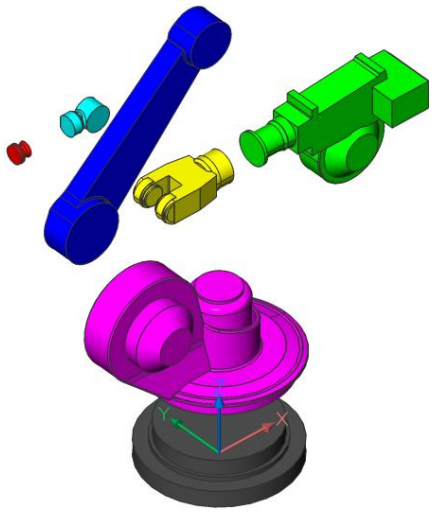

6. Use the command **BMFORM** with the **Local** option in the command line dialogue. Name the pieces, from bottom to top:
   Base (Grey), Platform (**Pink**), Shoulder (**Blue**), Arm (**Green**), Hand (**Yellow**), Head (**Cyan**), Grip (**Red**).
   Then your Mechanical browser should look like in the picture below.

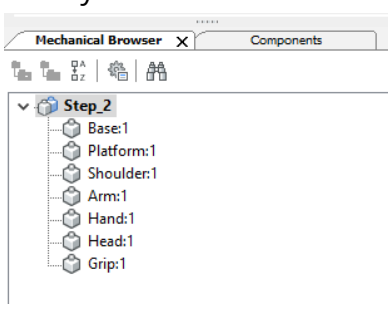

7. Create assembly constraints **DMFIX3D** for the Base, **DMCOINCIDENT3D** and **DMCONCENTRIC3D** to put together the assembly as it was when imported.

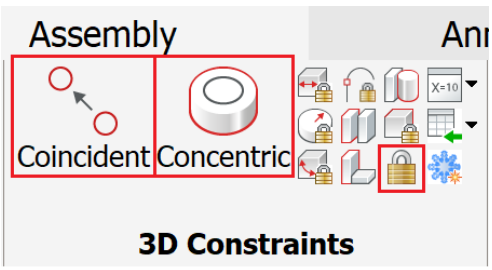

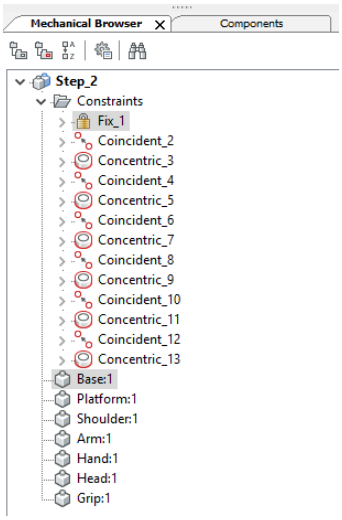

8. Rotate (**DMROTATE/Manipulator**) the Platform and Shoulder. If some parts of the mechanism starts to "jump" or move unexpectedly, go through every constraint property and check the direction property.
   The **Directions** property specifies whether the directions of the constraint arguments are **Same** or **Opposite**. Changing from one to another results flips constrained entities with respect to each other, it might resolve any issues with the inverse kinematics. If not try deleting constraints that cause issues and replace them.

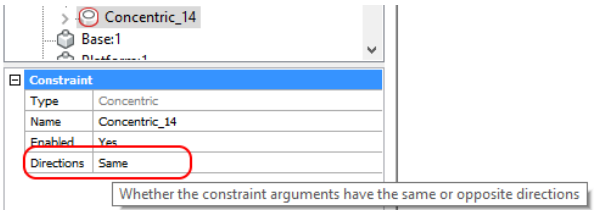

9. Insert (**BMINSERT**) the door component and position it with the help of 3D Constraints. The door needs to be downloaded from the 24/7 panel and inserted from the download path folder. (similar to previous assembly exercises)

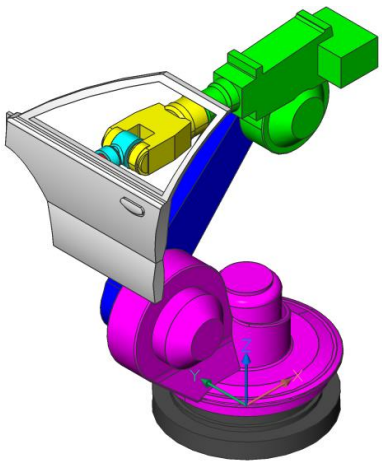

10. Try inverse kinematics by using the commands **DMMOVE/DMROTATE/Manipulator**.
11. Switch the **Hand** component to external with **BMEXTERNALIZE** or by doing as in the picture below.

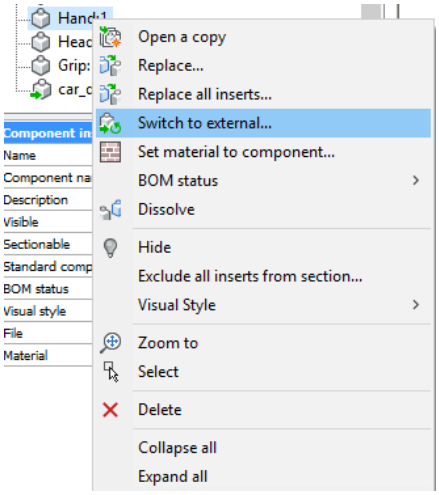

12. Open the Hand and change its length with the help of **DMEXTRUDE**. Remember to save the file after editing it.

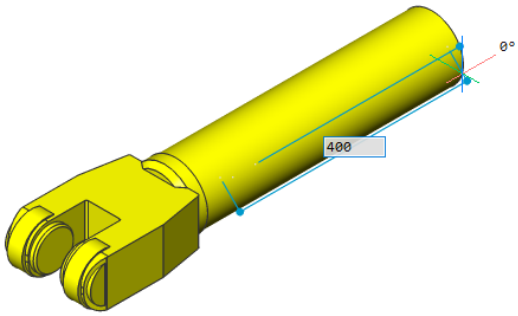

13. Switch back to the assembly and call **BMUPDATE** to see the result.

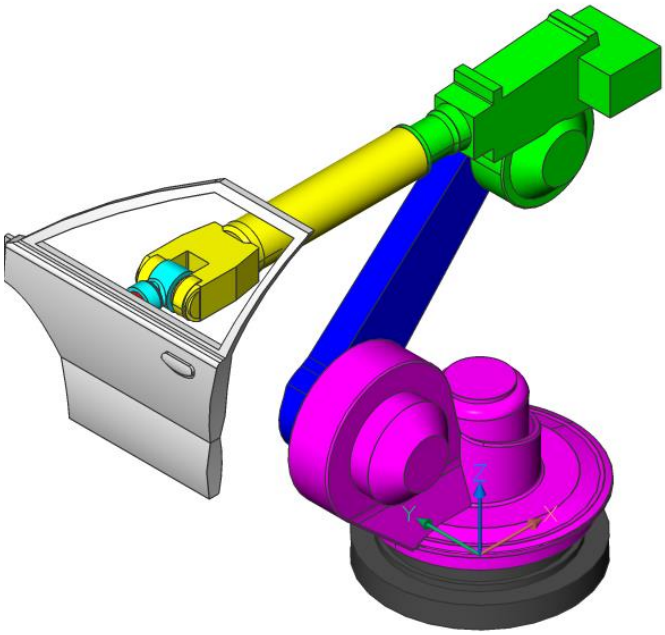

Parametric components

1. For this exercise, download the entire folder and work with the files from the local 24/7 folder where they are downloaded.
   Open the **support_2.dwg** file.

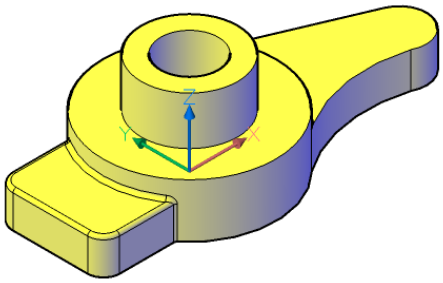

2. Switch to layout and check views/sections.

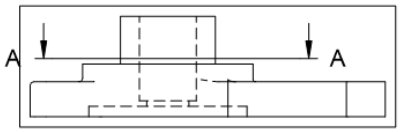

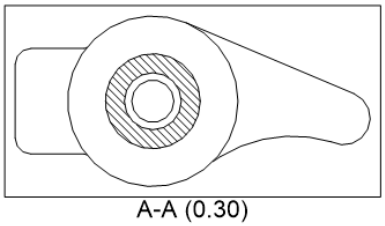

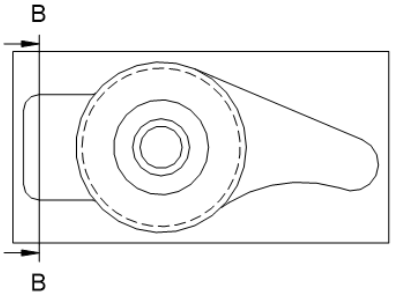

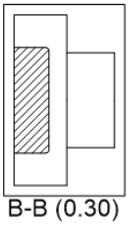

3. Open holeEdge_2.dwg. This file needs to be downloaded and later inserted from the local 24/7 download folder.

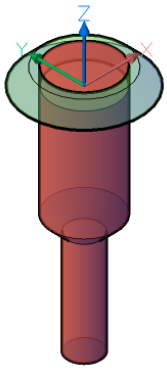

4. Observe the **BC_SUBTRACT** and **BC_UNITE** layers. By naming the layers in this way it allows geometry on this layer to modify existing pieces when inserted. The Unite layer will add material to the solid it is inserted on, while the Subtract layer will remove material from the solid it is inserted on. You will see this in action later in the exercise.

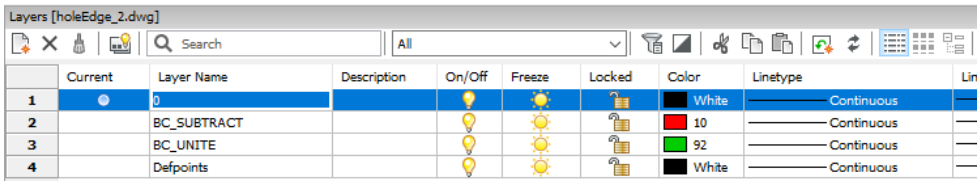

5. Change Diameter ½ -> ¼ Depth 1 -> 1.2 _edgeAngle 45° -> 55°.

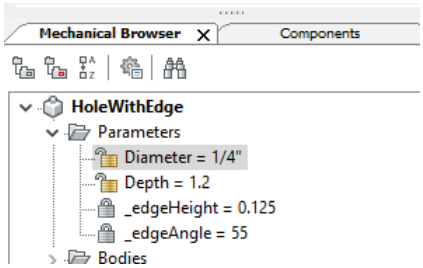

6. Switch to Support_2 model and insert (**BMINSERT**) **holeEdge_2.dwg**, **3** times with the snapping to the neighbor arcs. Remember to check your **ESNAP** settings and enable snapping to **Center**. While placing the file you can also hold **Shift** and **Right click** to enable this snapping setting. Below you can see where to place them.

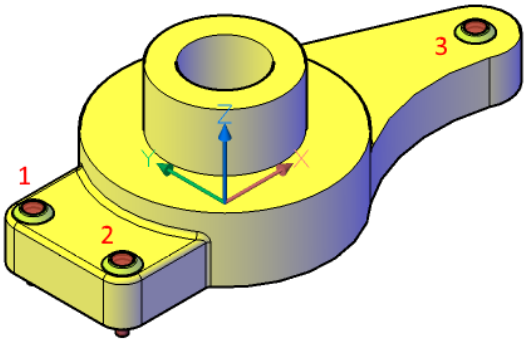

7. Switch off visibility for the "**BC_SUBTRACT**" and "**BC_UNITE**" layers in the layers panel (click lightbulb for each layer) and examine the model and its drawing.

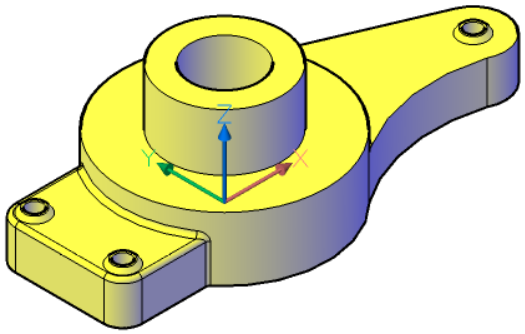

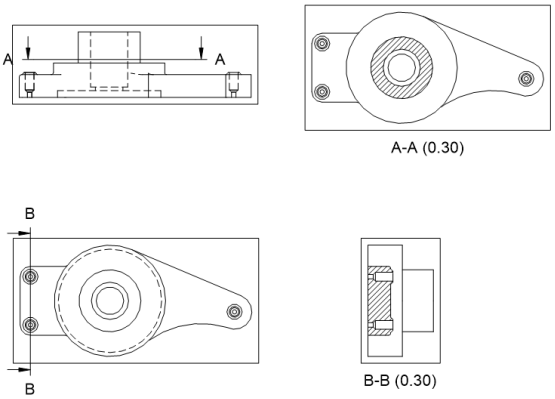

8. Select the pair of just inserted holes in the Mechanical browser, go to the Properties panel and change PROPERTIES D = 12.7 -> 7 and Depth = 1 -> 0.8.

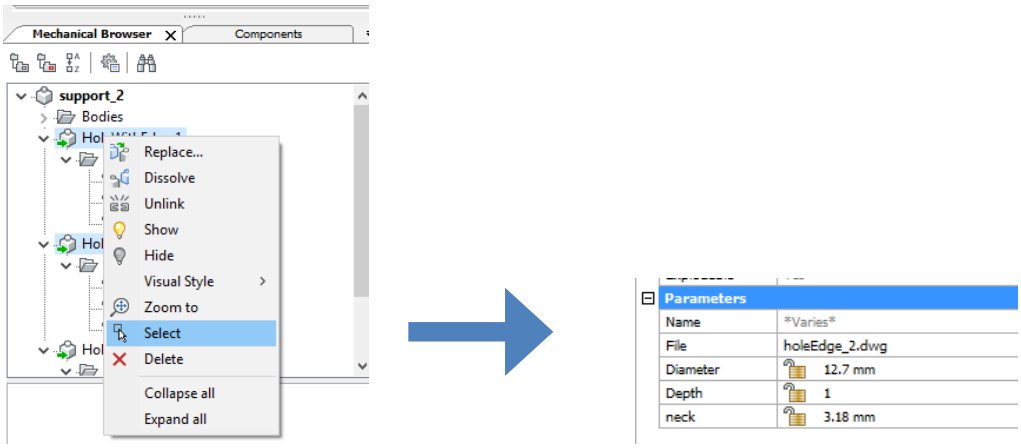

9. Examine changed drawing (the holes geometry has changed).
10. Open **rib.dwg** and add it to the Library panel (**CREATELIBRARYBLOCK**). Specify the name: Rib and the folder: DEMO.

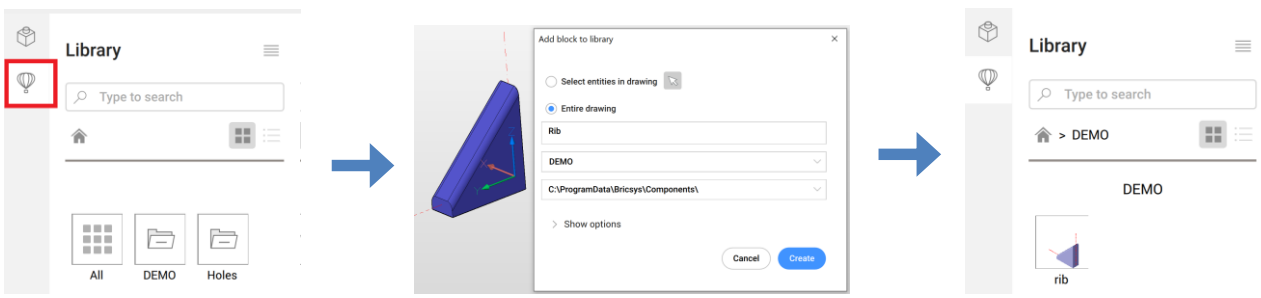

11. Switch to the **support_2** model and click on the rib component in the Library panel to initiate insertion.
12. Make sure Dynamic UCS is switched on (**F6** hotkey).
13. Hover over the face of the cylinder and place the rib with the snapping to quadrant of the circular edge. (Check **ESNAP** settings and enable **Quadrant**)

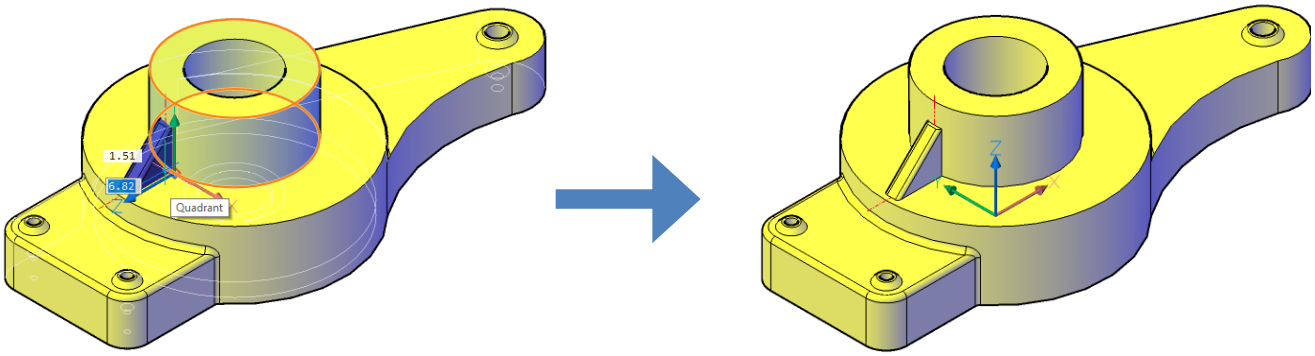

14. Select just inserted Rib in the **Mechanical Browser** and Create a polar array (**ARRAYPOLAR**) with **6** instances around the central hole.

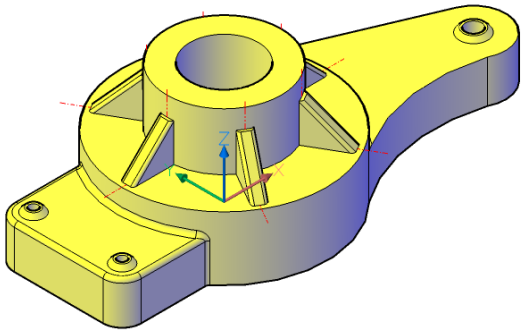

15. Select the array in the **Mechanical Browser** and at the bottom of the panel, change the number of array instances to **8**.

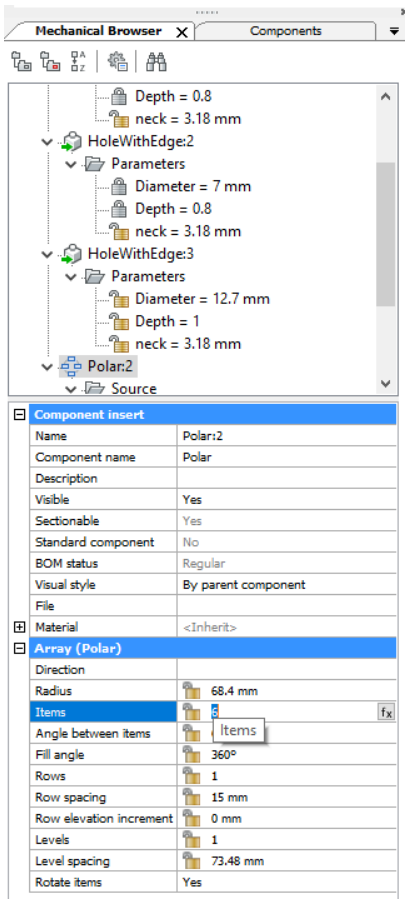

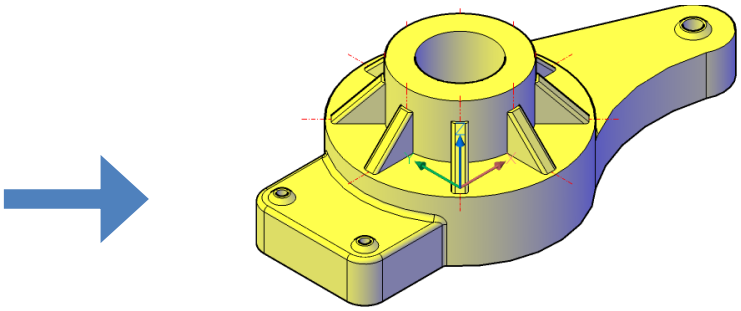

16. Change Rib's parameters: **Angle=55**, **H=43**.

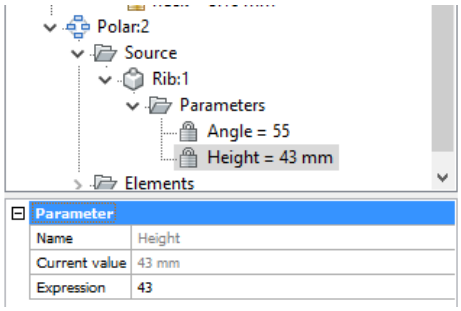

17. Examine updated drawing.

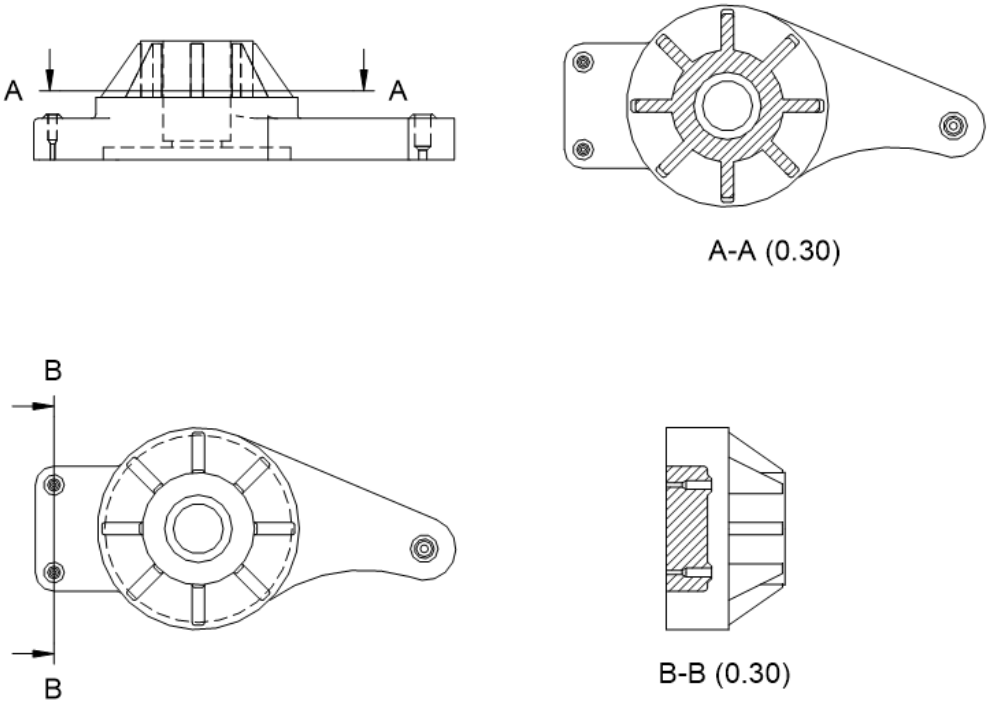

Drawing generation

1. Open the **Valve.dwg** file.

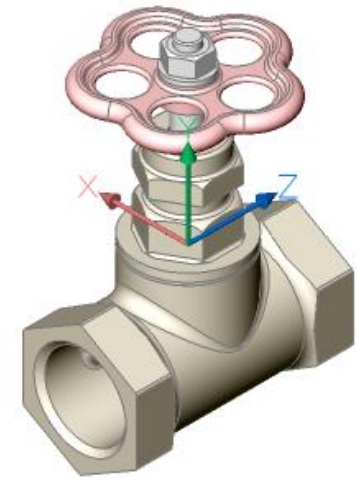

2. Go to the Annotate tab of the Ribbon and call **Base View** tool (**VIEWBASE**) for Entire model.

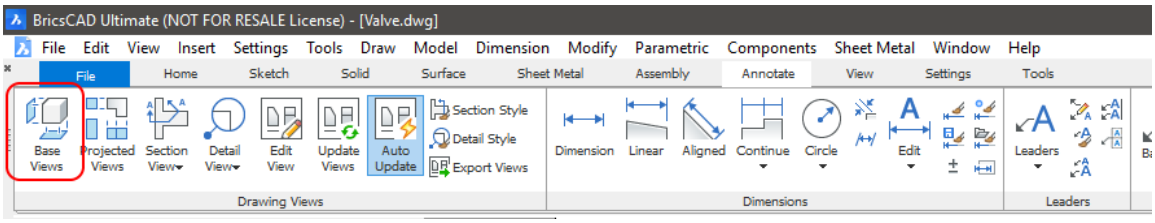

3. In the **Layout1** create four base views (Front, Left, Right, Top) and one isometric view. After placing the first base view you will be able to move your cursor to create the additional projected views.

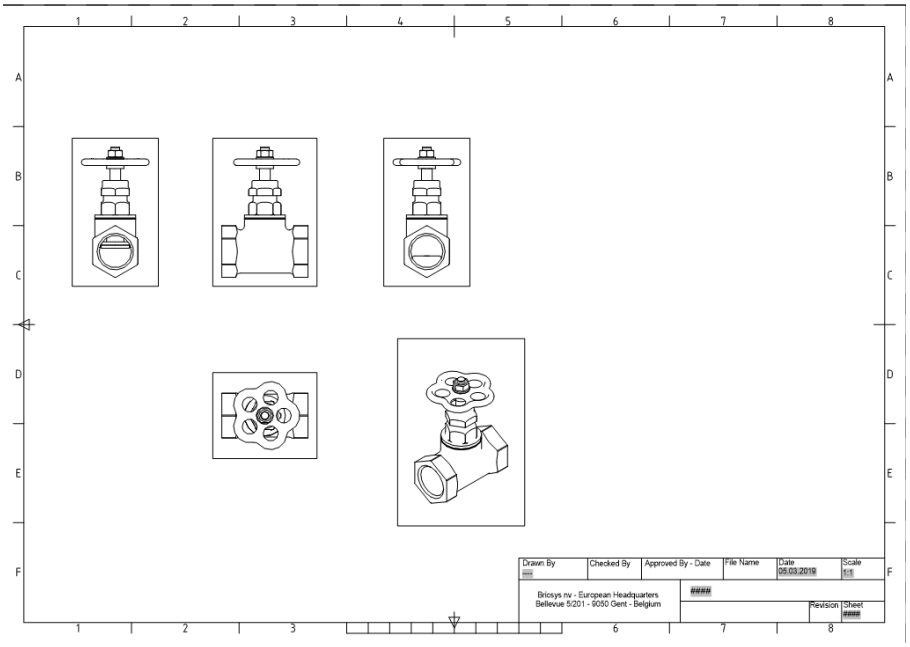

4. We can select one or several views and change their properties using Properties panel, for example, we can disable/enable hidden and tangent lines.

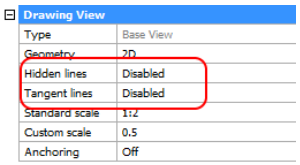

5. Go to Annotate tab, select **Full Section View** type and create a full section (A-A) from the right base view. As seen below.
   You can use snapping on the drawing view for a more accurate result.

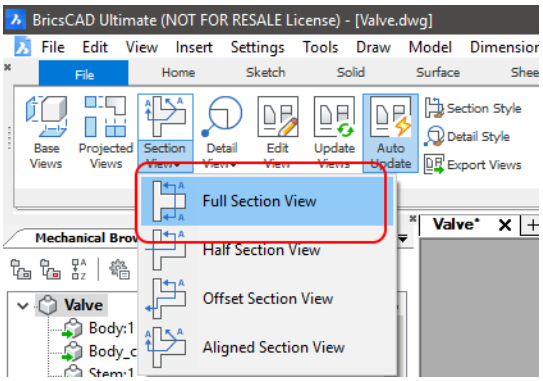

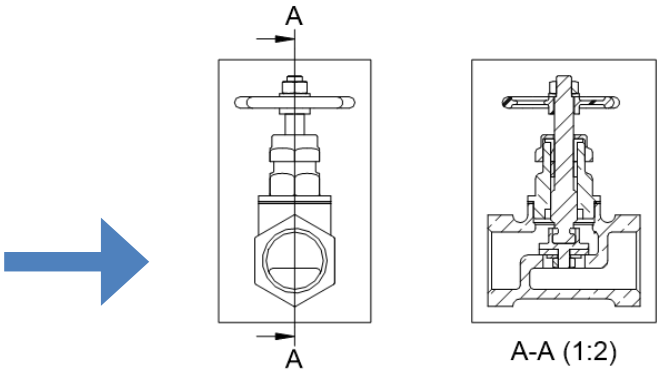

6. Create a half section (B-B) from the bottom base view.

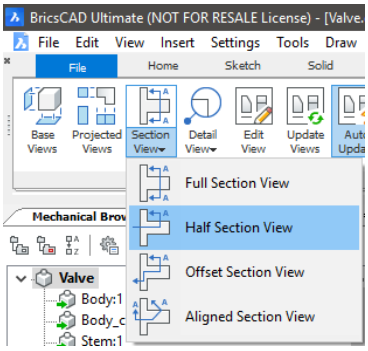

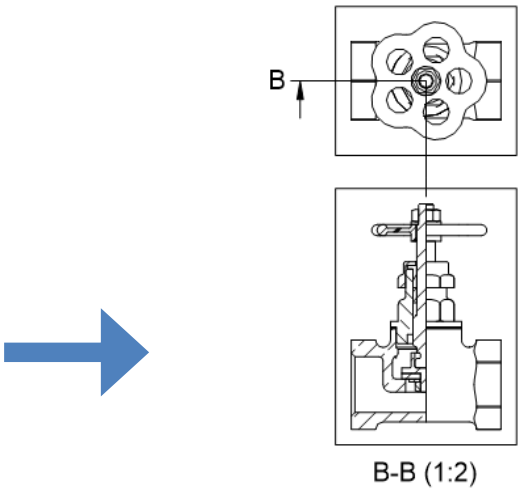

7. Create a section (C-C) of the connecting flange of the valve, as seen below. Create this with the command line dialogue option “Depth”. Set the depth to 1 , accept and This option allows you to place section view as normal, but while only including 1mm (in this example) of the part following the section line.

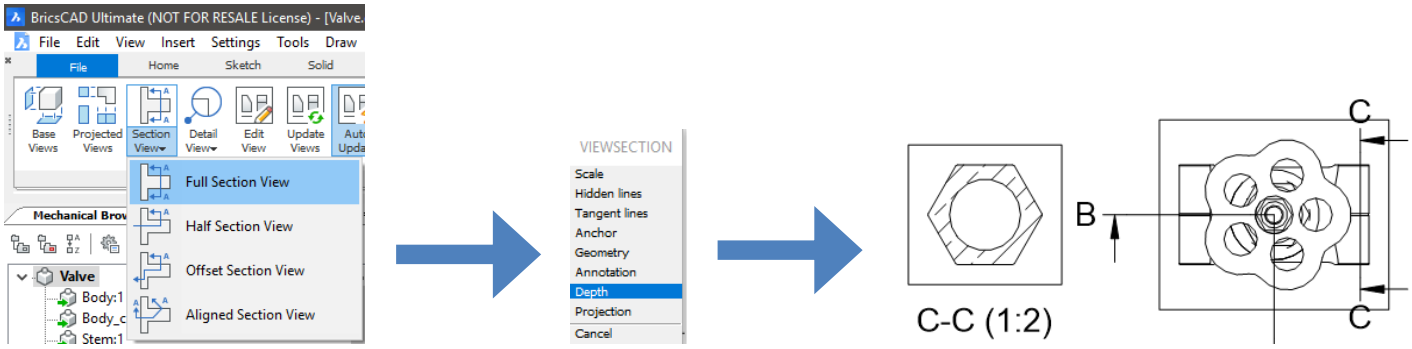

8. Under the Annotate tab, create a "**Rectangular**" detail view **D**, as seen below, from the section A-A.

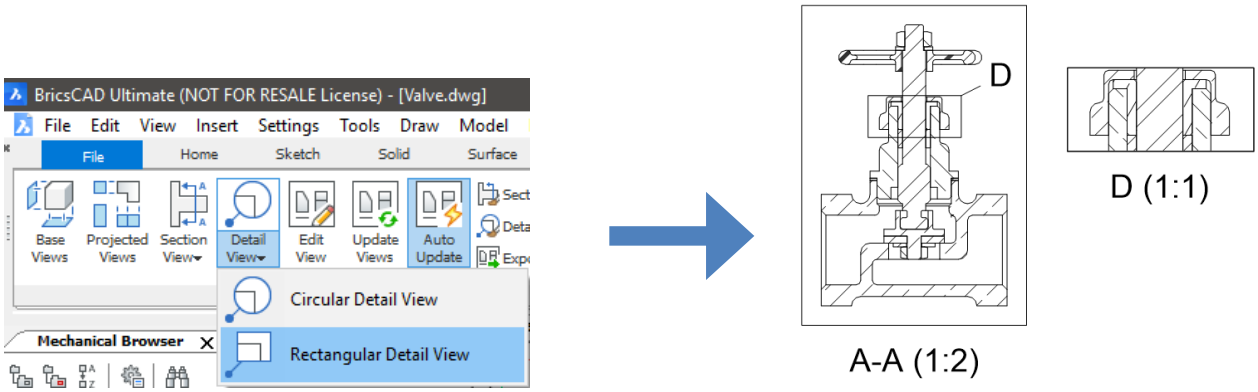

9. Under the Annotate tab create "**Circular**" detail view **E**, as seen below, from the section A-A.

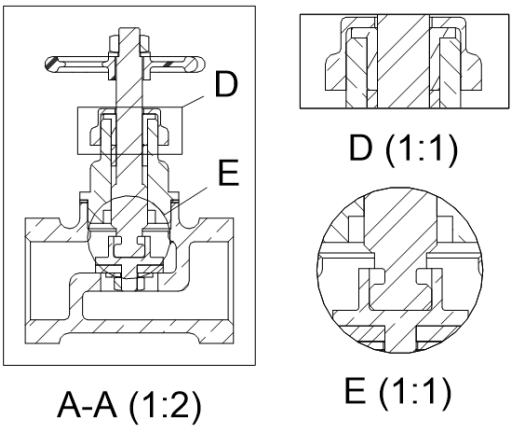

10. Create a "**Circular**" detail view F, as seen below, with the scale 2:1 from the section B-B. You can change the scale by selecting the Detail view and finding the standard scales in the Properties panel.

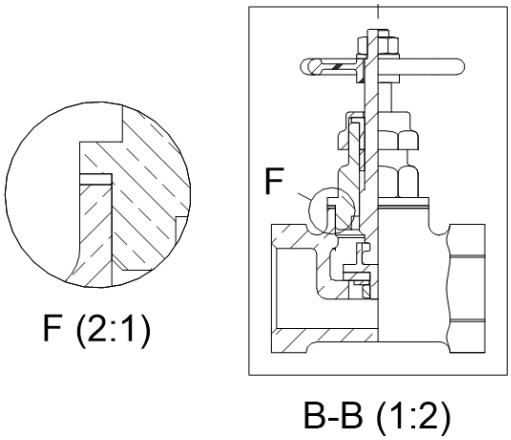

Drawing View	
Type	Base View
Geometry	2D
Hidden lines	Disabled
Tangent lines	Disabled
Standard scale	2:1
Custom scale	2
Anchoring	Off

11. Open **Section Style** (VIEWSECTIONSTYLE), create a new style and name it "**Custom section style**". Explore the settings and change the colour of the identifier, its position. Try to set up Arrows and Hatch representation, line types of the section lines, the position of the end lines etc. Keep an eye on the Preview window where you can see your changes previewed.

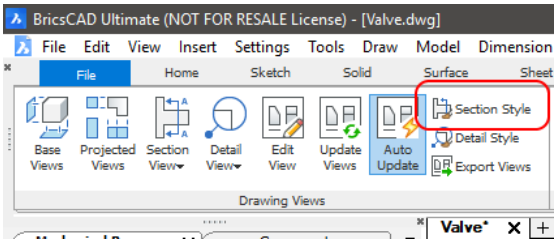

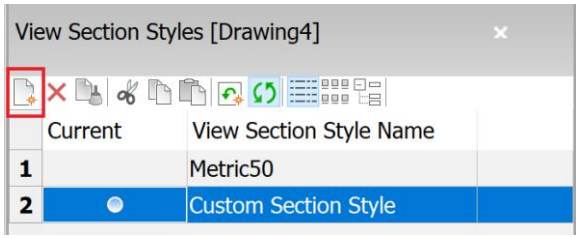

12. Open **Detail Style** (VIEWDETAILSTYLE), create a new style and name it "**Custom detail style**". Explore the settings and change the colours of the identifier and boundary. Keep an eye on the Preview window where you can see your changes previewed.

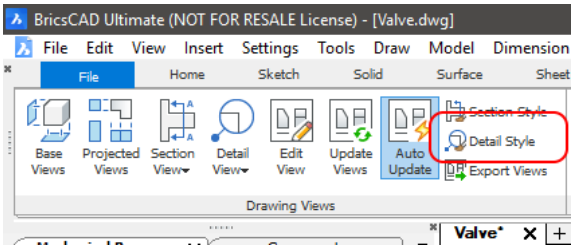

13. Select any section views in the drawing and in the properties panel change its style to "**Custom Section Style**", which we recently created.

Drawing View	
Type	Base View
Geometry	2D
Hidden lines	Disabled
Tangent lines	Disabled
Standard scale	1:2
Custom scale	0.5
Anchoring	Off
Depth	Full
Depth value	0
Projection	Orthogonal
Section View Style	Custom Section Style

14. Select detail views and change its style in the properties to "**Custom Detail Style**", which we recently created.
15. Add the necessary dimensions to the drawing, as shown in the drawing below. Feel free to try placing more dimensions of different varieties. When selecting a measurement that you have placed, you can also add tolerances to it in the properties panel, feel free to give it a try.
16. Add Bill of Materials (**BMBOM**) as seen below. Through the command line dialogue, select **Configure**, then the **Material** and **Mass** options. This will add these rows to the BOM table.

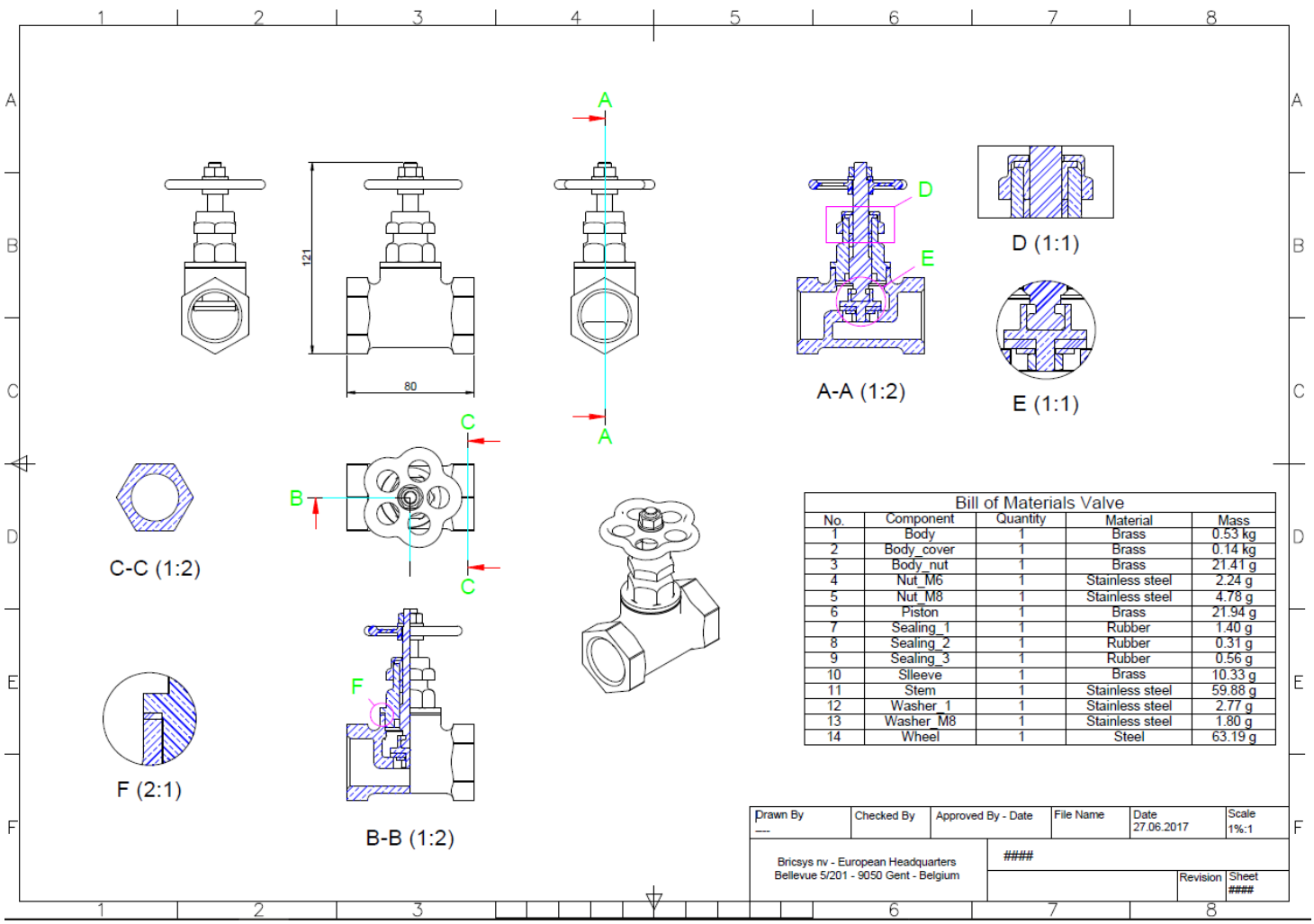

17. Open the **BOM Manager** panel. Remember that if you do not have this panel open or docked, you can right click on the ribbon and find it through the sub option “Panels”.
18. The **BOM Manager** is where you can generate and edit your Bill of Materials. You can add additional columns, apply filters, summarize values, and much more. Let us try to summarize the amount of parts in this assembly now.

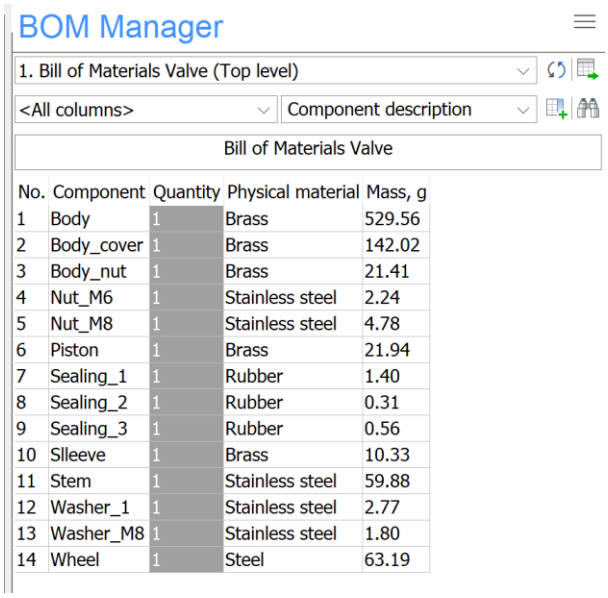

No.	Component	Quantity	Physical material	Mass, g
1	Body	1	Brass	529.56
2	Body_cover	1	Brass	142.02
3	Body_nut	1	Brass	21.41
4	Nut_M6	1	Stainless steel	2.24
5	Nut_M8	1	Stainless steel	4.78
6	Piston	1	Brass	21.94
7	Sealing_1	1	Rubber	1.40
8	Sealing_2	1	Rubber	0.31
9	Sealing_3	1	Rubber	0.56
10	Slleeve	1	Brass	10.33
11	Stem	1	Stainless steel	59.88
12	Washer_1	1	Stainless steel	2.77
13	Washer_M8	1	Stainless steel	1.80
14	Wheel	1	Steel	63.19

19. Right click on the Cell that says “**Quantity**”. In the option menu you will see “**Footer**”. Hover over this and select “**Sum**”.

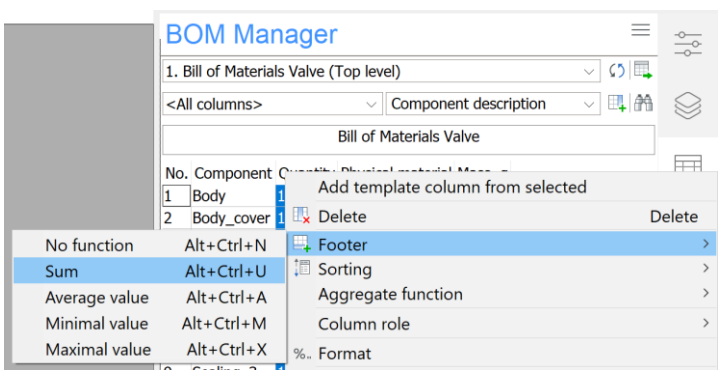

20. If you look at the bottom of the BOM table you should see it add a row that is called “TOTAL:”, and at the bottom of the Quantity column the parts should be summarized to 14 total parts.
21. Repeat this with the **Mass** column as well, and you will see that the total weight of the assembly at 862,19 grams.
22. At the bottom of the **BOM Manager** panel you can see the **Bill of materials properties**. Change the “**Footer title**” to “**Sum:**”.

Bill of materials properties	
Title	Bill of Materials <NAME>
Type	Top level
Property set	Mechanical only
Filter	
Sorting mode	Automatic order
Grouping mode	Auto
Footer title	Sum:

23. Pay attention to the BOM table that we placed in the Drawing space. It should update automatically to reflect the changes made in the BOM Manager.

Bill of Materials Valve				
No.	Component	Quantity	Physical material	Mass, g
1	Body	1	Brass	529.56
2	Body_cover	1	Brass	142.02
3	Body_nut	1	Brass	21.41
4	Nut_M6	1	Stainless steel	2.24
5	Nut_M8	1	Stainless steel	4.78
6	Piston	1	Brass	21.94
7	Sealing_1	1	Rubber	1.40
8	Sealing_2	1	Rubber	0.31
9	Sealing_3	1	Rubber	0.56
10	Slleeve	1	Brass	10.33
11	Stem	1	Stainless steel	59.88
12	Washer_1	1	Stainless steel	2.77
13	Washer_M8	1	Stainless steel	1.80
14	Wheel	1	Steel	63.19
Sum:		14		862.19

24. This is only scratching the surface of what is possible with the BOM Manager, but now you know where you can generate and edit the Bill of Materials for your models.

Sheet metal from scratch

1. Later in the exercise we will need to insert a block. Therefore be sure to download the entire folder for this exercise so we ca insert the block from the local 24/7 download folder.
   When downloaded, create a new drawing: File-> New (QNEW).
2. Draw a Rectangle (0,0,0) - (255,100,0).

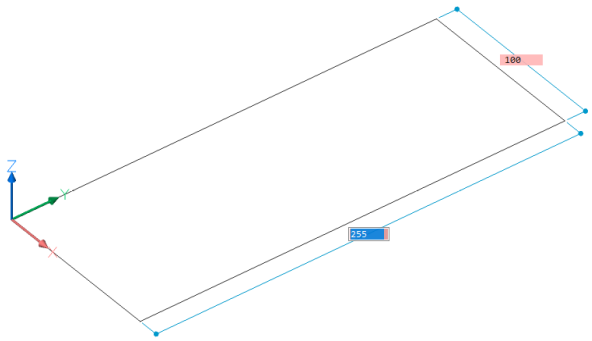

3. Hover over rectangle and call Create Base Flange from the Quad menu (**SMFLANGEBASE**).

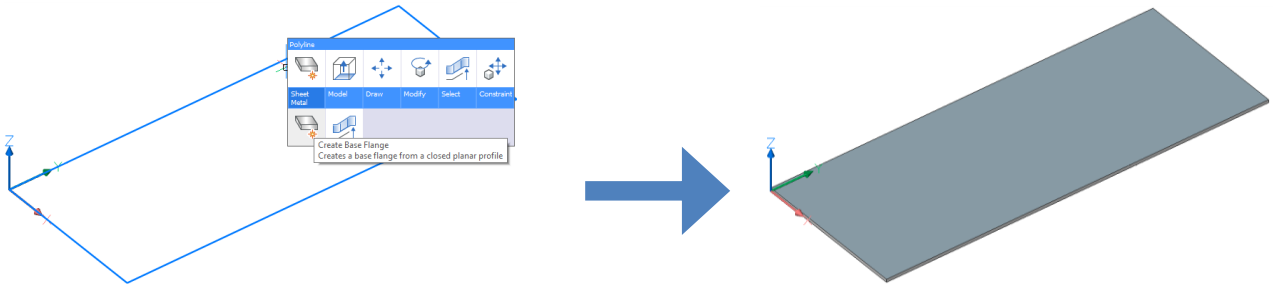

4. Hover over the **front bottom edge** of the base flange. Make sure you have enabled edge detection for this. Also activate face detection for later in the exercise. Then build a new flange (**SMFLANGEEDGE**) with a length of **13mm**, and a **90°** angle pointing downwards.

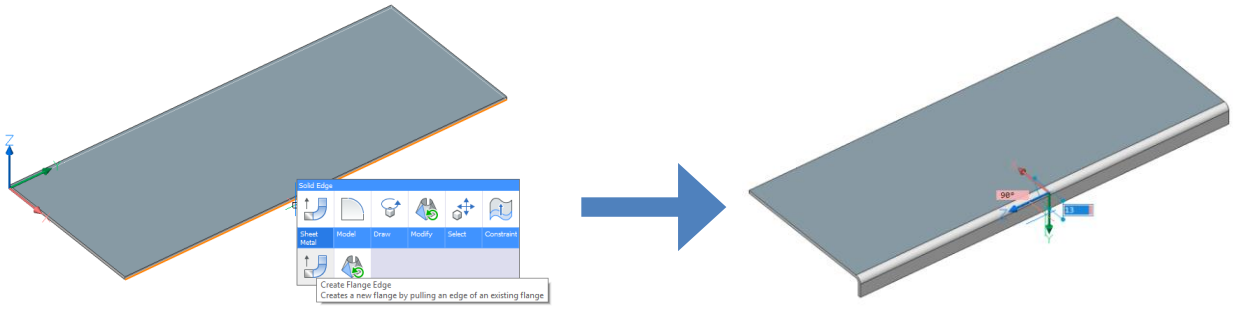

5. Hover over the **back top edge** of the flange and build partial flange as seen below. To do this activate the **SMFLANGEEDGE** command and select the **Width** option. The command will ask for the offset width for the flange, so type in a 32mm gap on each side of the flange. Then we can set the length and angle of the flange. The total length of the flange will be 62mm, with an angle of 90° pointing upwards.on the ribb

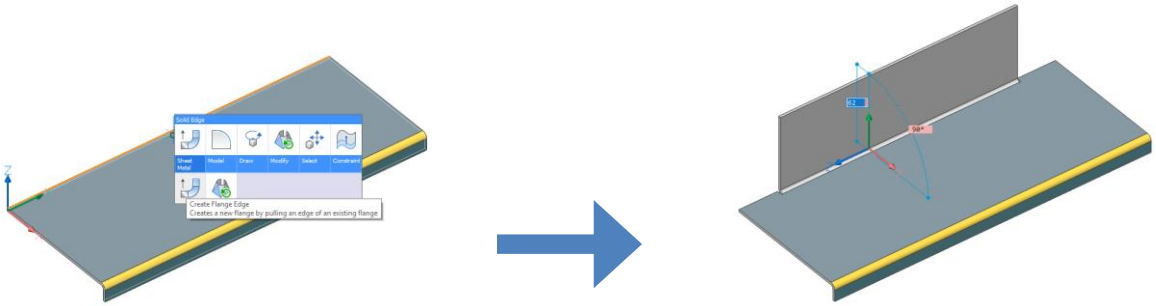

6. Create another flange from the one created in the last step. We want it pointing backwards, so select the back edge of this flange. The flange will be 13mm long with an angle of 90°.

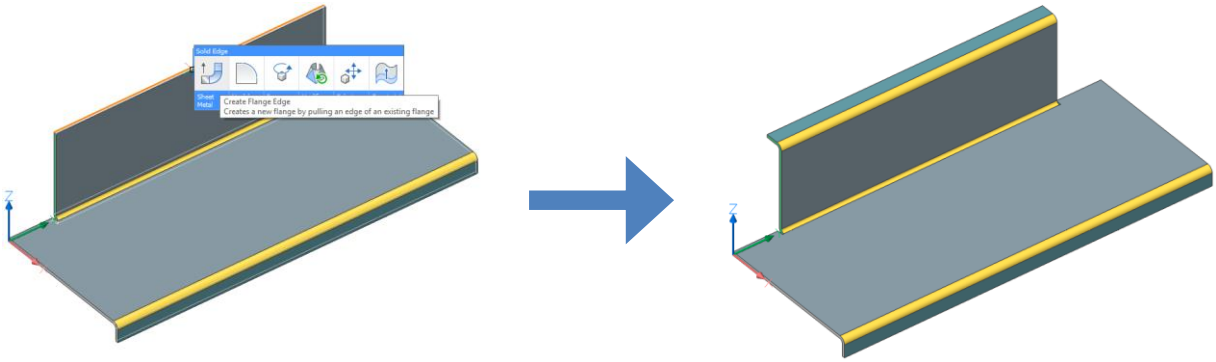

7. In the Mechanical Browser click on the root node and observe Sheet Metal properties at the bottom part of the browser.

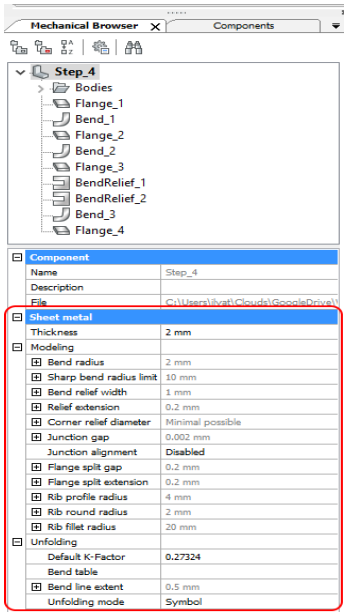

8. View you model from an isometric view angle (so that we can easily observe changes made to the model) and change the **Thickness** to **5mm**. See the model change and undo the changes to revert back to the original thickness.
9. Now change the **Bend Ratio** to **3**. See how the model changes. Then undo this change.
10. Hover over the Little front Flange, call the Flange Rotate (SMFLANGEROTATE) command and try to rotate the flange. This shows how the properties of the flange remain the same even if you try to rotate it after its creation.

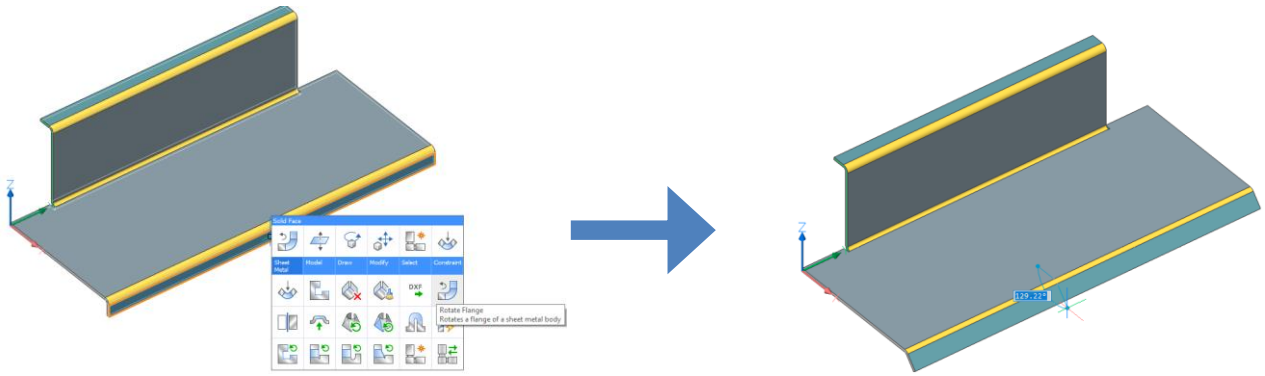

11. Hover over the vertical partial flange and use Push/Pull to see the behavior of sheet metal flange feature. As you can see if you try to move a flange the thickness will be maintained.

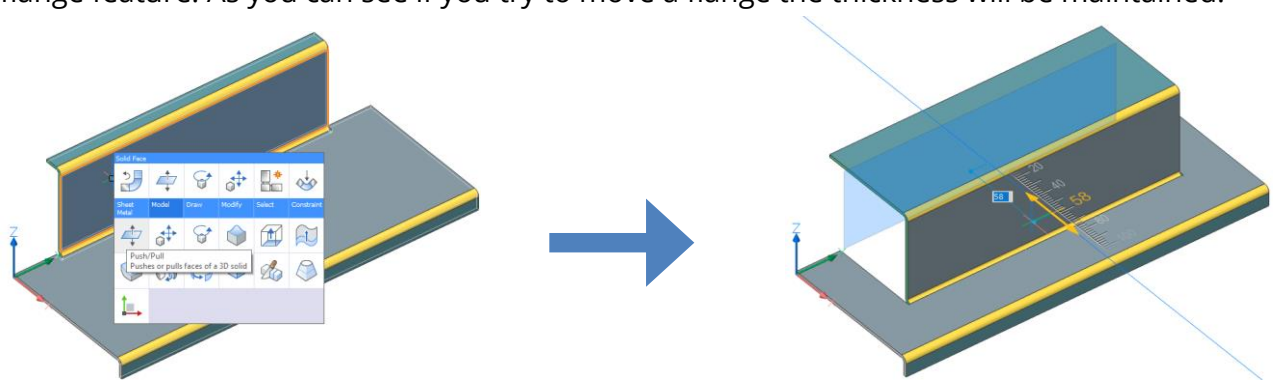

12. On the Ribbon under the **Sheet Metal** tab and the **Modify** section. Select the **Dissolve** (**SMDISSOLVE**) command. Apply it to the same vertical flange. The color of the flange will change indicating that Flange feature has been dissolved. Try to Push/Pull the face as before. Now you will see that when dissolved, the sheet metal features will not be maintained. Undo the changes made in this step.

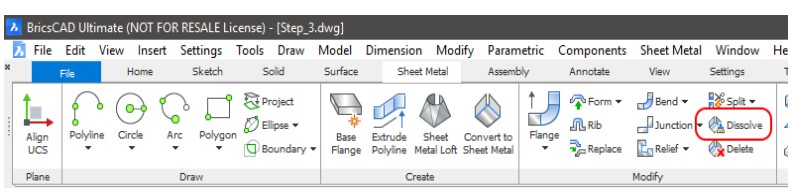

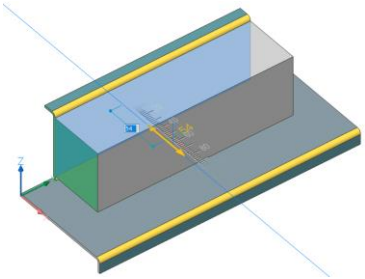

13. Using the same method as before create two new flanges. Except this time select two edges at the same time, to symmetrically create the edge flanges seen below.
Here is the length and angle of the flanges: **L = 66**; **a = 90°.**

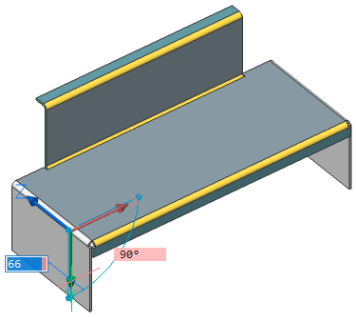

14. Build two more side flanges symmetrically. With these dimensions: **L = 25 a = 90°.**

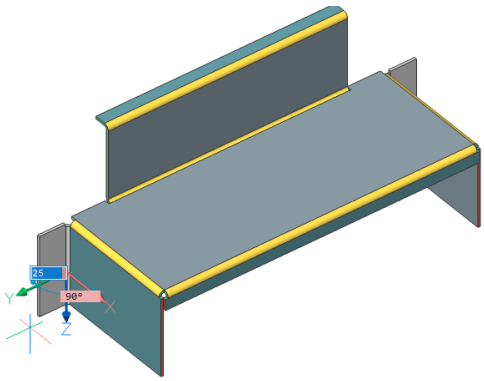

15. Build last 2 little horizontal flanges **L = 15 a = 90°.**

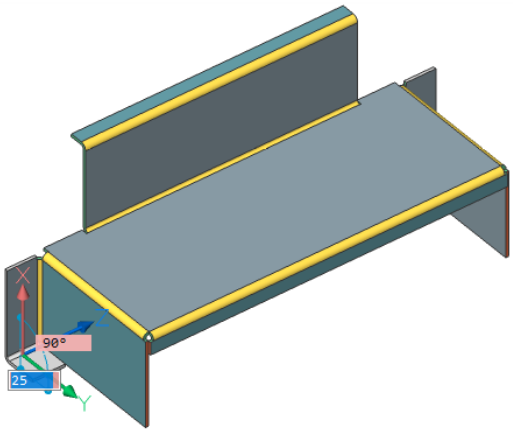

16. Go to the Library panel and choose the Holes library.

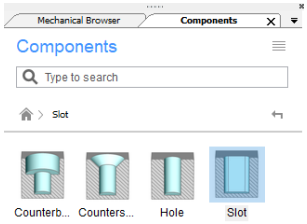

17. Click on **Slot**, then change the default parameters to **Diameter = 5**, **Length = 40** and place it on the face like shown below. You might need to use the "**Rotate component**" dialogue option to get the orientation right. Place it **30mm** from the top edge and **12mm** from the side edge, you will be able to tab between these measurements while placing it on the face.

18. Mirror the hole symmetrically.

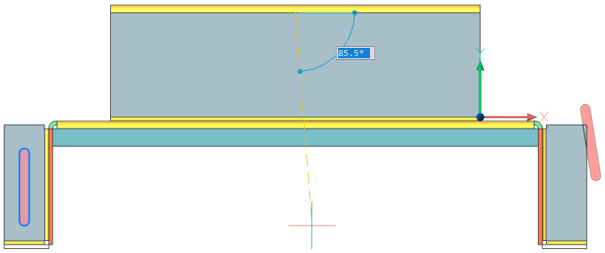

19. Switch off the "**BC_SUBTRACT**" layer. This will hide the red geometry of the slots.
20. Select all the short edges as shown below. The goal is to create chamfers. Give the edges in the first picture a length of **5mm**. Then do the same for the large chamfers in the second image, but with a value of **50mm** instead.

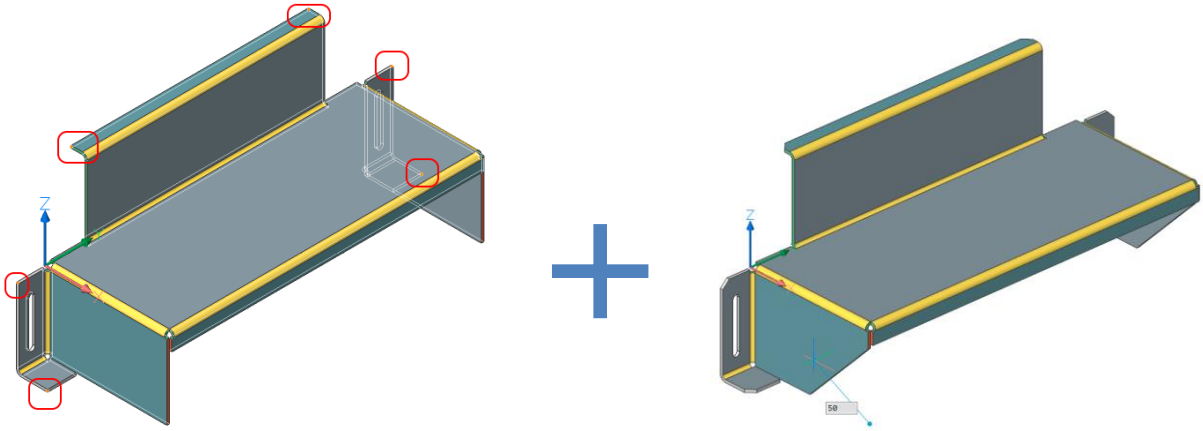

21. Insert the **holes2D.dwg** block with the explode option. You can also explode it after placement (**EXPLODE**). Make sure that this file has been downloaded so you can insert it from your local 24/7 download folder. When inserted and exploded, **DMEXTRUDE** it to create holes.

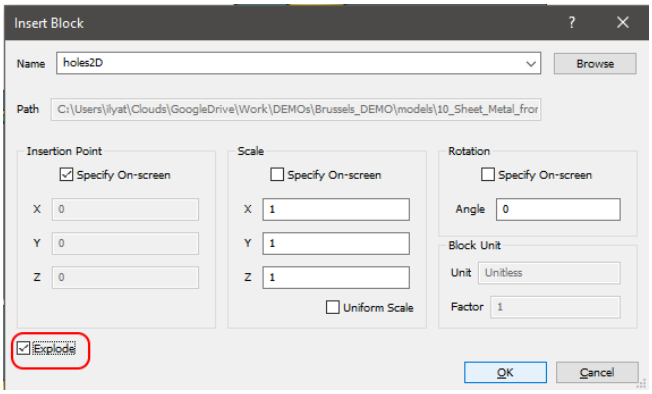

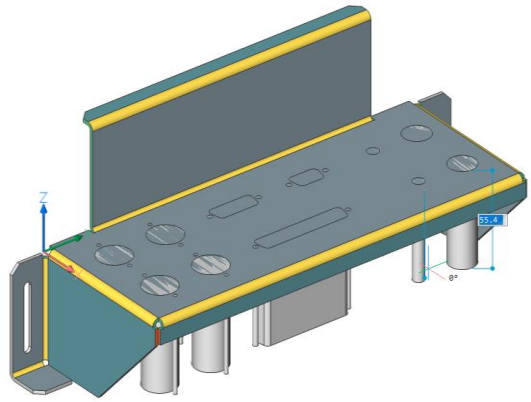

22. Hover over any flange in the model and call Unfold (**SMUNFOLD**) from the Quad.

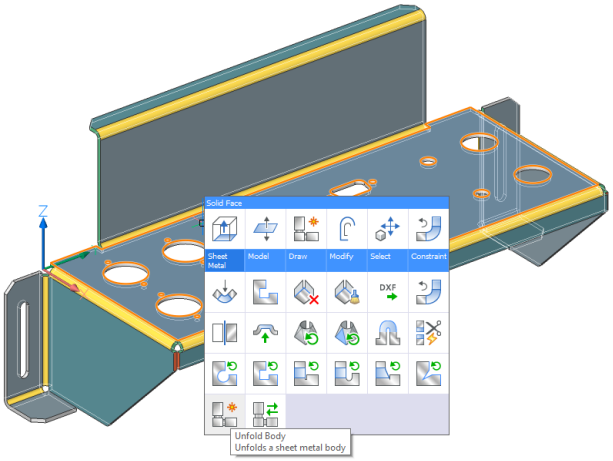

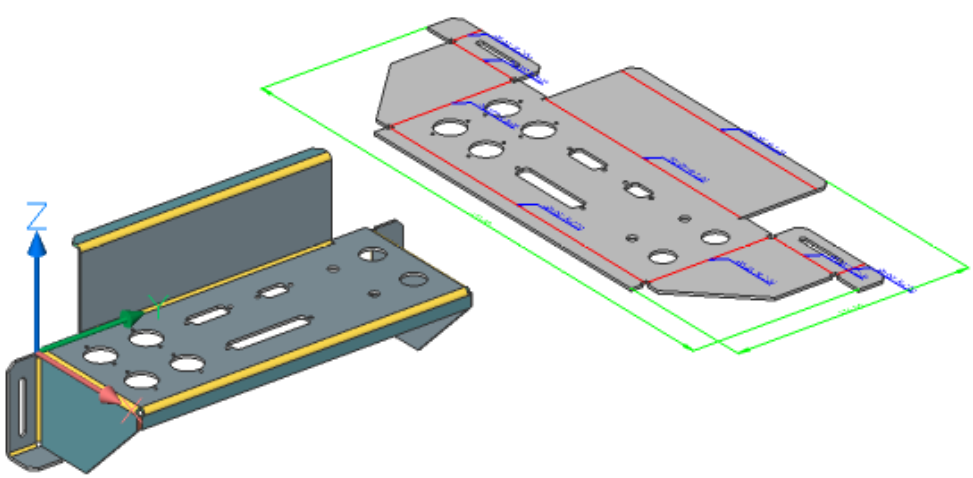

Sheet metal from solid

1. Create a new drawing: File-> New (QNEW).
2. Draw a Box (0,0,0) - (100,200,100).
3. Create a **DMCHAMFER** with size = **50**, as seen below.

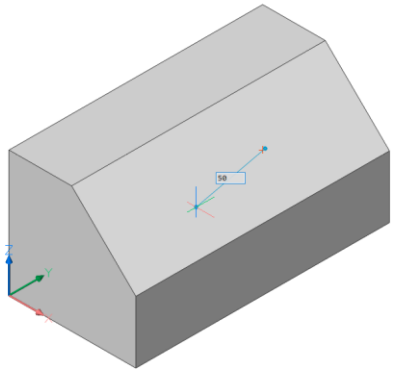

4. **DMEXTRUDE** front face **L = 50**.

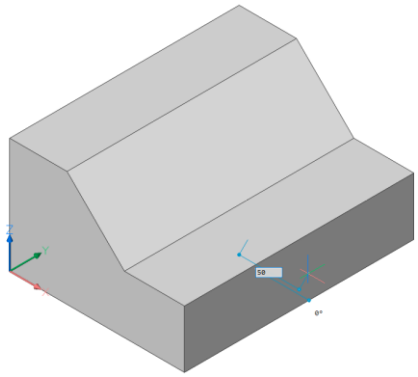

5. **DMROTATE** horizontal face by **a = 15°.**

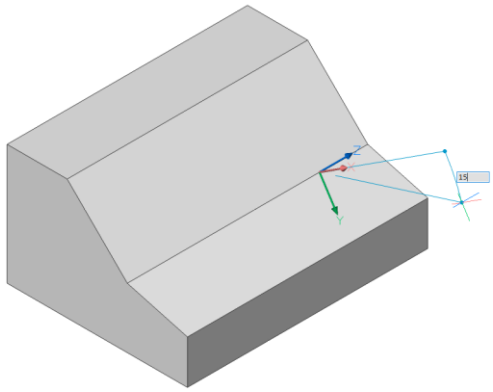

6. Select the solid and use the Shell command from the QUAD, Ribbon, or the command **SOLIDEDIT** with the sub options **Body** > **Shell**. Select the bottom face to remove it, and set the wall thickness to **2mm**.

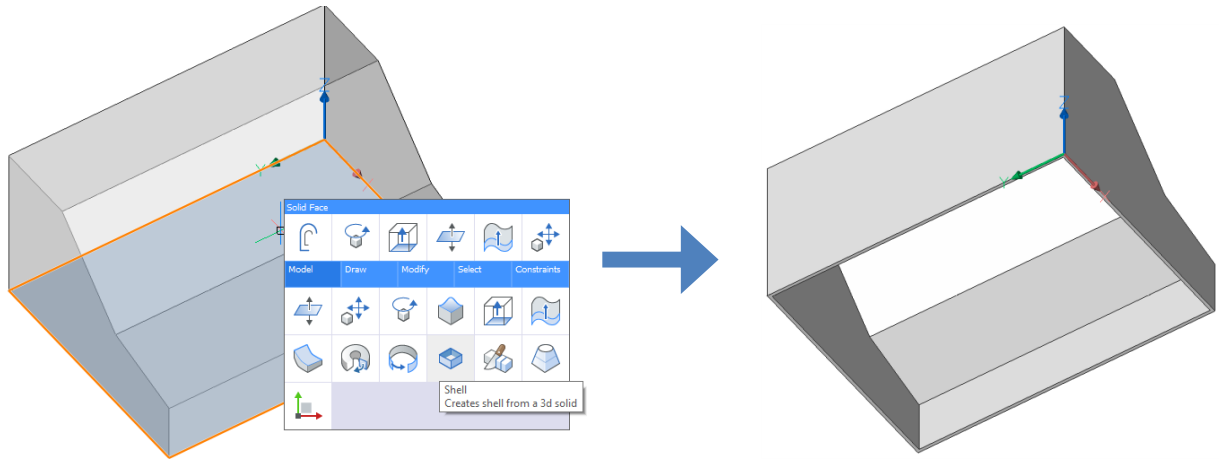

7. Hover over the front inclined face and call the Offset (**OFFSET**) tool. Offset the face geometry inward with a value of **10mm**.

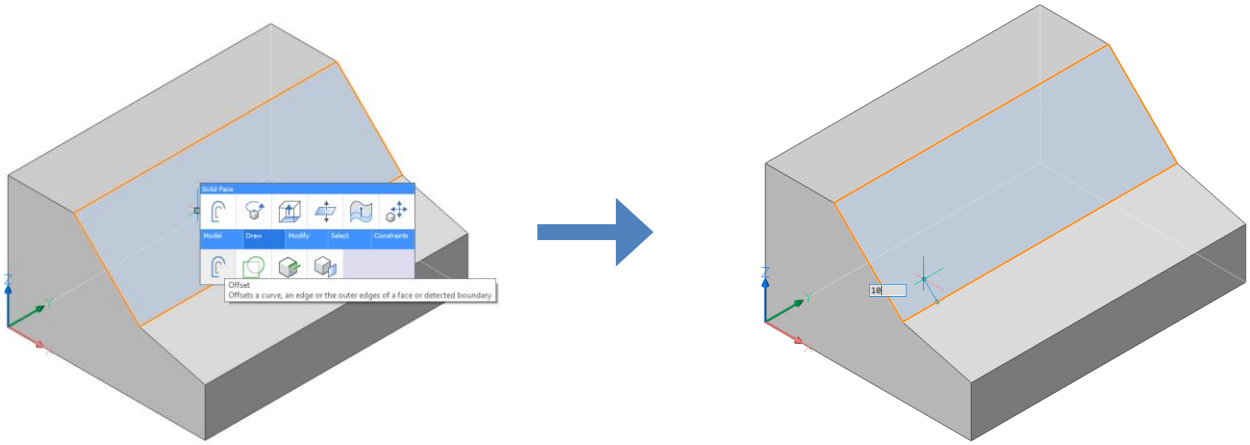

8. Select, or hover over the newly created rectangle and use the **DMEXTRUDE** tool to create a rectangular hole. Extrude it with a depth of **2mm** into the model, just to ensure that we extrude through the wall of the shelled solid. But not far enough to affect the rest of the model.

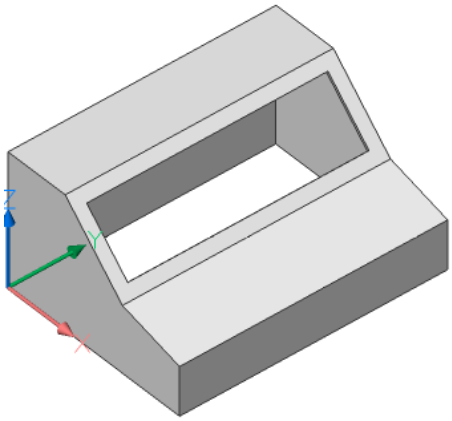

9. On the Ribbon under Sheet Metal in the Create section and call the **Convert to Sheet Metal** tool (**SMCONVERT**), or use the same tool from the Quad.

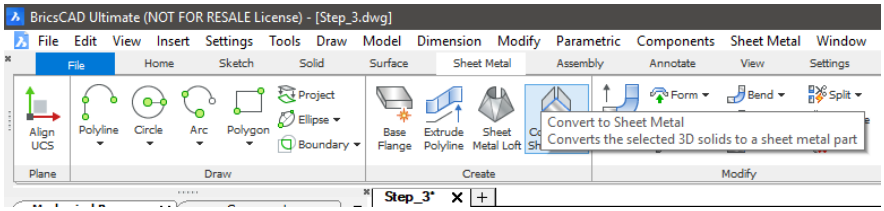

OR

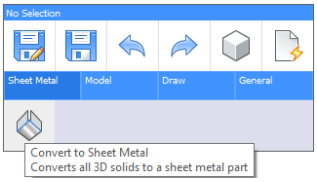

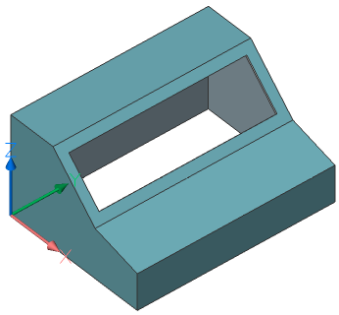

10. Go to the Ribbon under Sheet Metal in the Modify section and activate the Relief (**SMRELIEFCREATE**) tool. The tool will cut small pieces of the solid body to avoid future material conflict during bending operation. Apply it to the entire model.
However, keep in mind that in later versions of BricsCAD these bend reliefs will often be generated automatically when applying other Sheet Metal features.

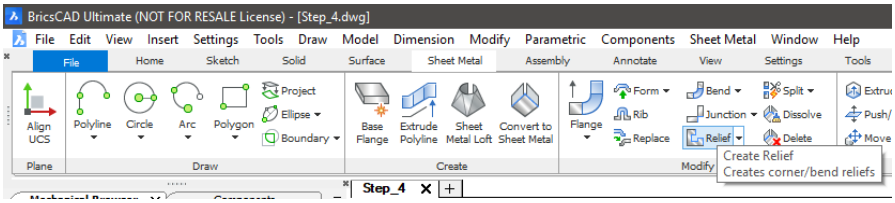

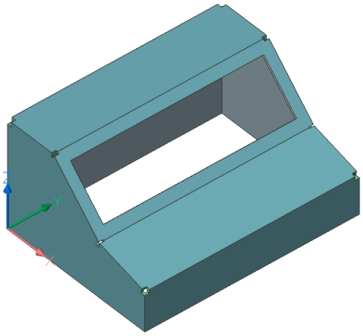

11. Go to the Ribbon under Sheet Metal in the Modify section and activate the Junction (**SMJUNCTIONCREATE**) tool. Apply it to 4 side edges (highlighted below) on both sides of the model.

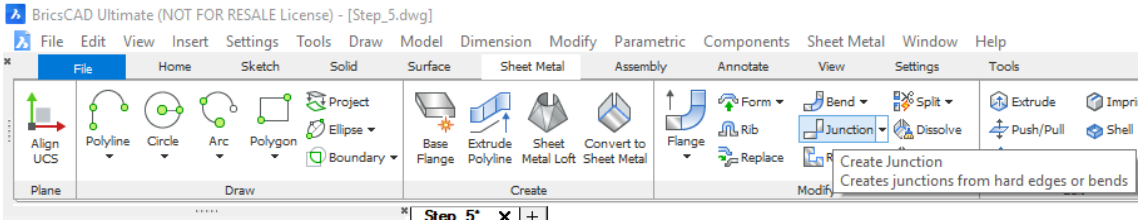

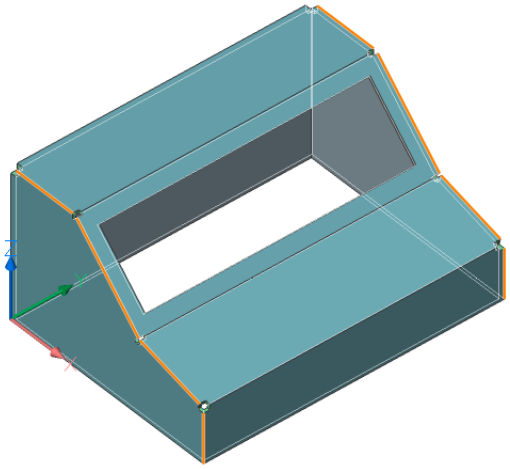

12. In the same location on the ribbon activate the Bend (**SMBENDCREATE**) command. Apply it to the entire model. By applying it on the entire model, the command will detect any remaining hard edges and place bends on these.

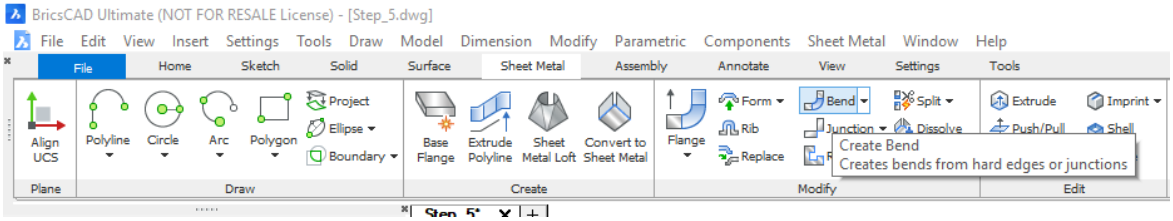

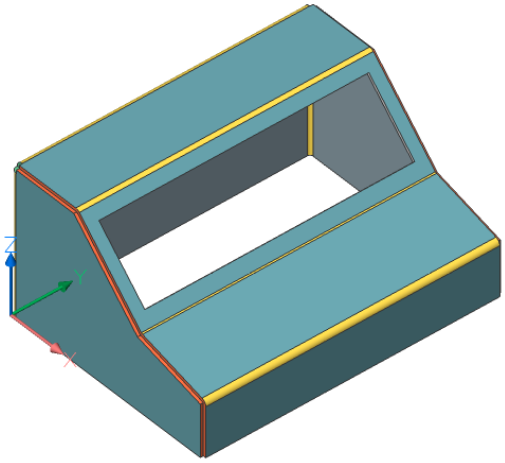

13. Hover over the front inclined face and call Unfold (SMUNFOLD) command.

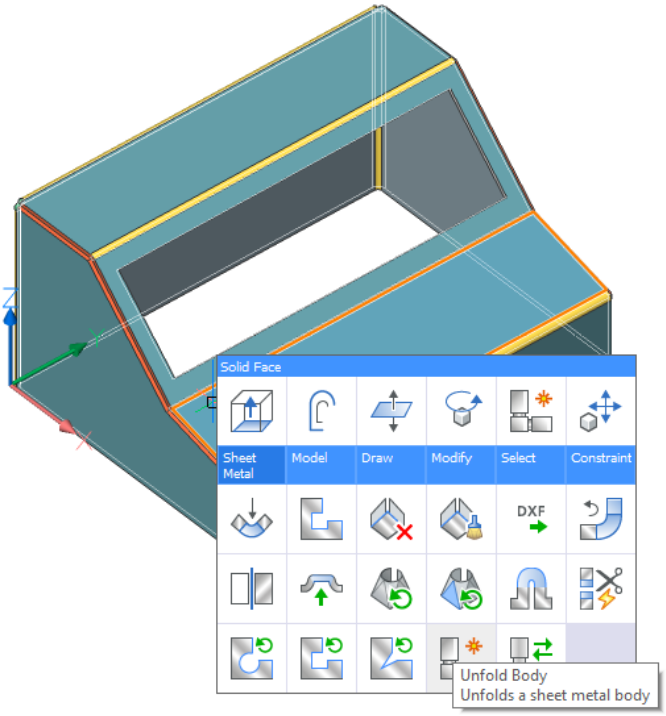

14. Place the unfolding near the initial model (use "Keep" option).

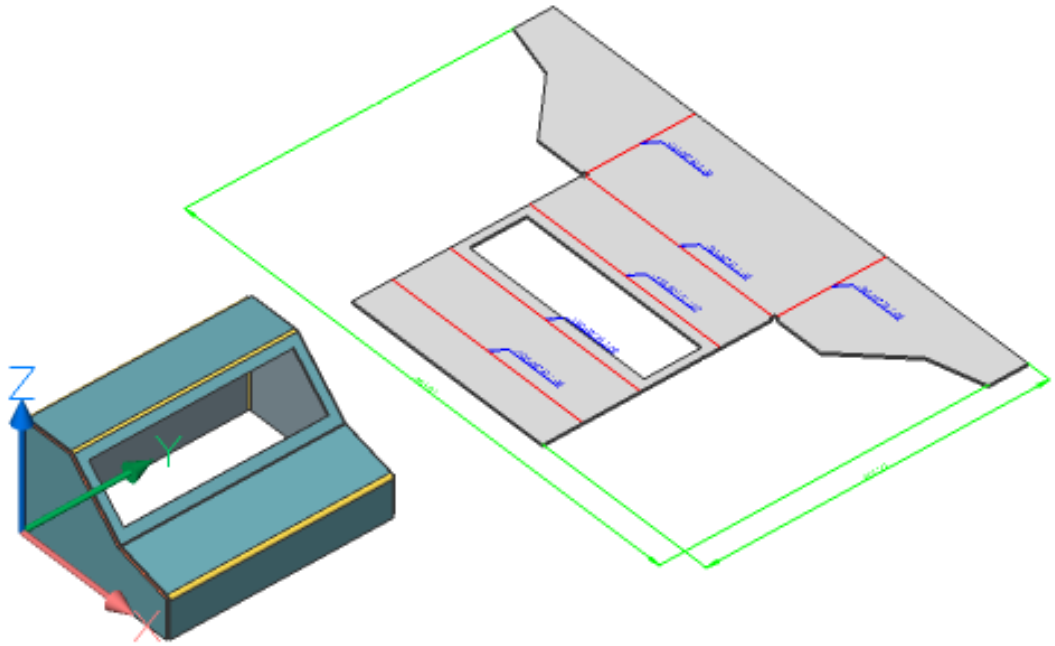

15. <u>In older versions of BricsCAD, Junctions in the Mechanical Browser might be painted in red. These are warnings we need to fix. However, if you are running a later version of BricsCAD and you do not have any errors, you can skip this step.</u>

Zoom to Junction_1 and you'll see one of the arguments is too long and contact with more than one flange feature. To fix this situation hover over the long side face and call Split (SMIMPRINT) tool. The junction will be split into several junction features. Repeat the same procedure for another side of the model.

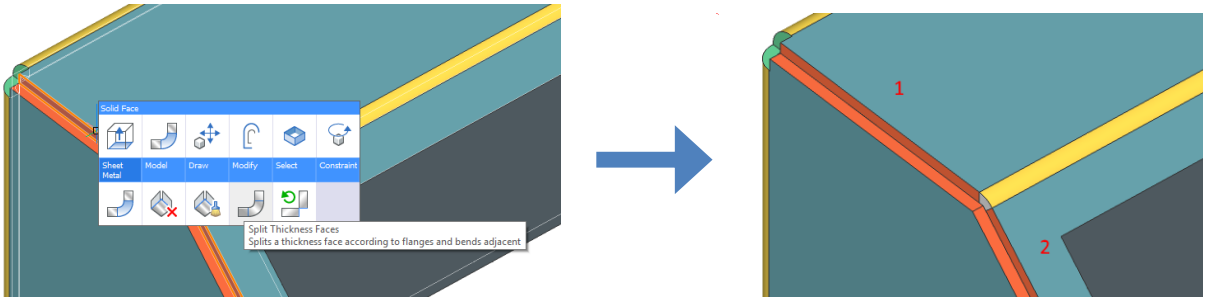

16. Let's create a hypothetical situation, where the unfolding of this part is too large to fit on the laser cutting machine in the workshop, and we need to optimize the space used. The open window on our model wastes a lot of space and material, so we will change the unfolding to make this space smaller.

First, hover over junctions marked bellow one-by-one and switch them to bends by using Create Bend (**SMBENDCREATE**) tool.

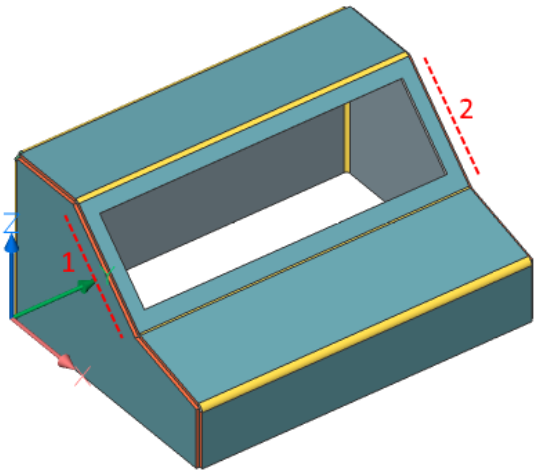

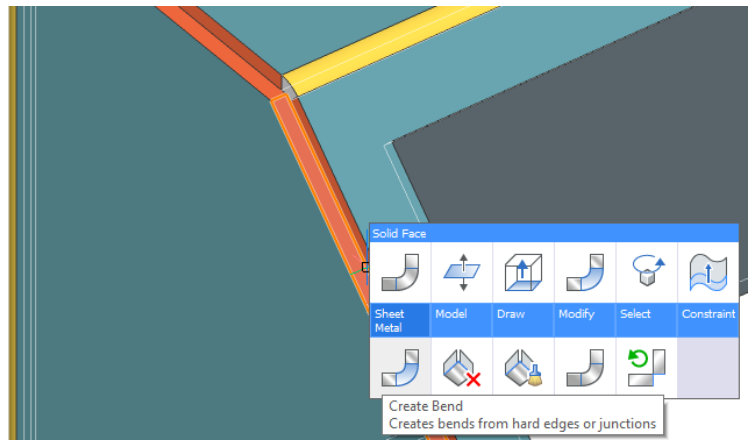

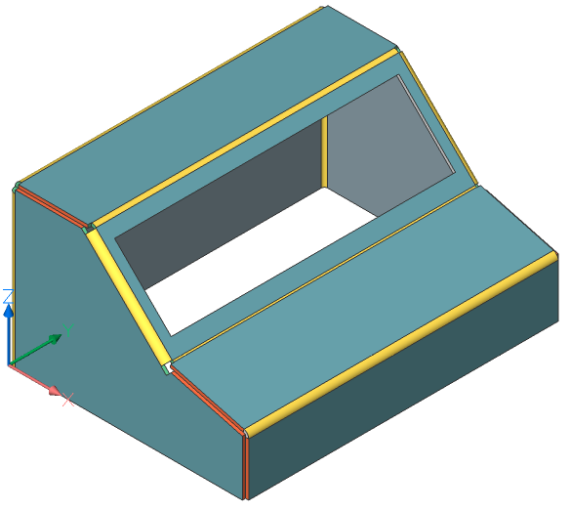

17. Next, go to the Ribbon under Sheet Metal in the Modify section and activate the Split (**SMFLANGESPLIT**) tool.

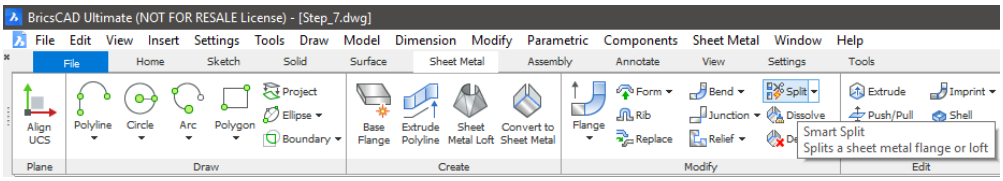

Create four splits as shown below.

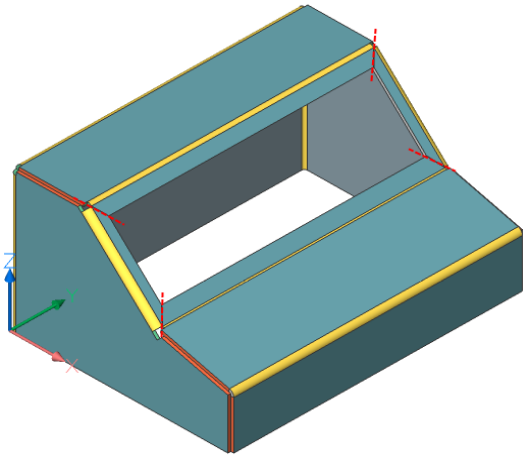

<u>Alternatively</u> in the V21 release of BricsCAD you can use "**Smart Split Propagate**". When you place one split, it will automatically detect any similar locations where this split can be applied.

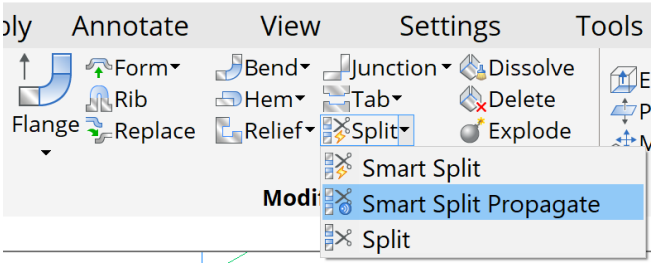

So after activating this tool, place the split in one of the corners as shown in the picture above. Then it will automatically suggest other possible splits in similar corners. If all splits are placed properly, press Enter to accept them.

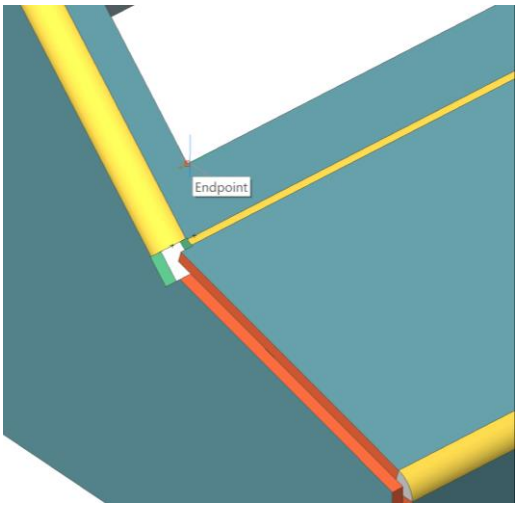

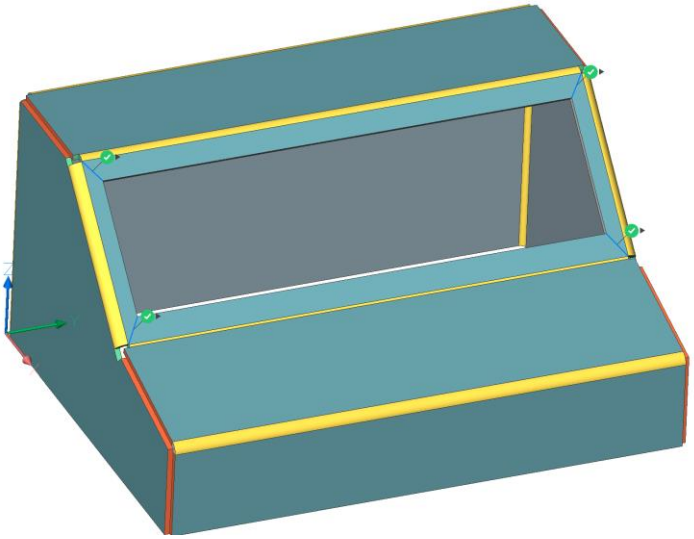

Two bodies will appear in the Mechanical Browser.

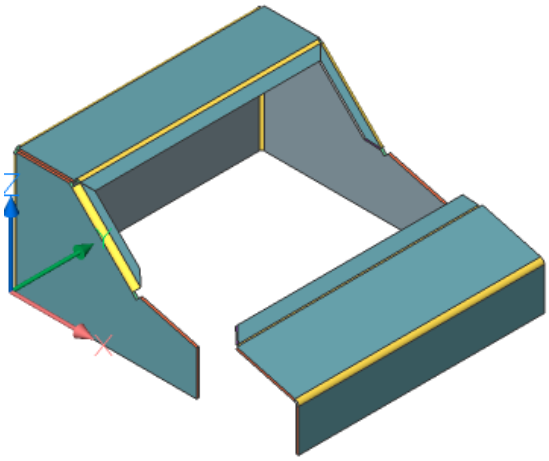

18. Call Unfold for both bodies. Now nesting will be more optimal.

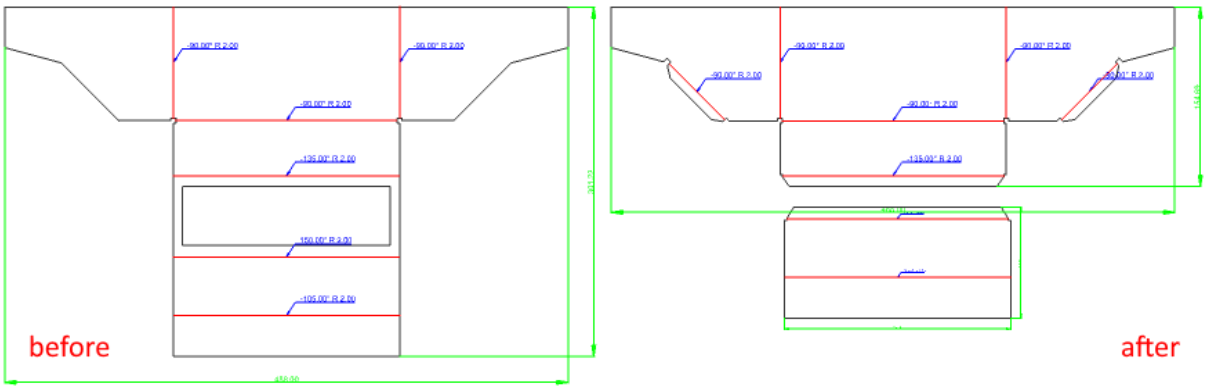

Sheet metal form features

1. Create a new drawing: File-> New (QNEW).
2. Go to the Ribbon-> Home -> File and call Import (IMPORT) command.

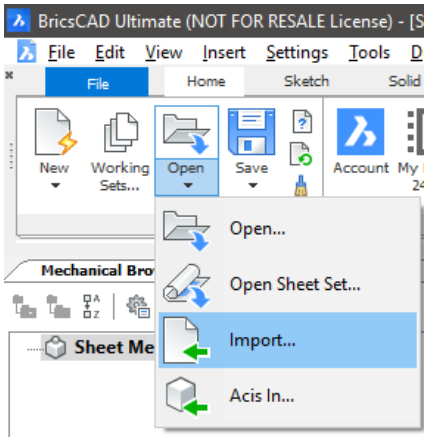

3. Import Sheet Metal **Enclosure.SLDPRT** file. If you do not have the **Communicator** installed you can open the **Step_1.dwg** file and start from there.
   When it is opened you can see that it is a basic 3D solid without BricsCAD Sheet Metal features, yet. Because it is a thin walled solid we can easily convert it to sheet metal.

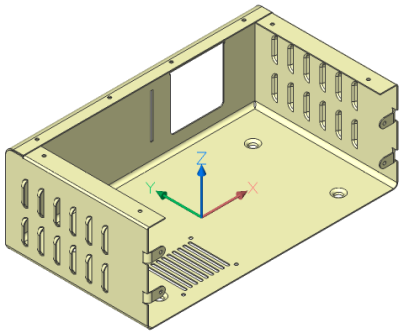

4. Go to the Ribbon under Sheet Metal in the Create section and activate the Convert (**SMCONVERT**) command to recognize sheet metal features. You will see the colours change as it recognizes sheet metal features.

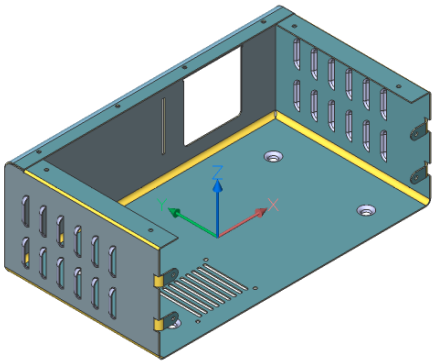

5. Examine the list of features in the Mechanical Browser. All form features are recognized, but they are not parametric.
6. Locate a louver feature and hover over any face of it. Activate the Replace (**SMREPLACE**) command from the Quad.

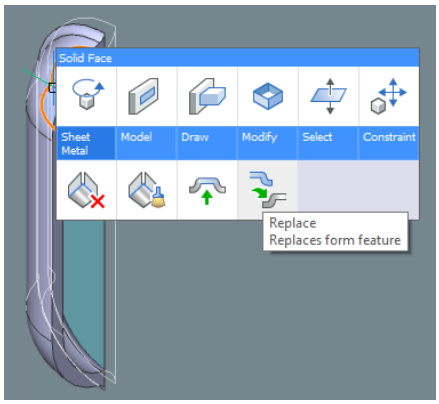

7. Choose the **Louver.dwg** form feature from the built-in library of parametric form features. The command line will ask to replace all similar form features, select **Yes**.

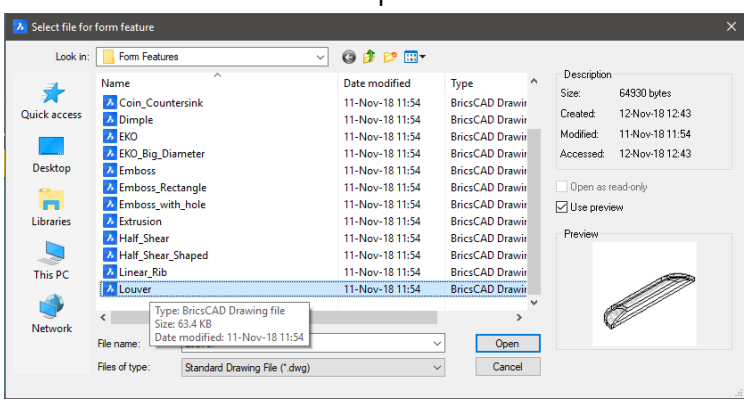

8. All louvers will be replaced with parametric louvers. Size of the new louvers will be adapted to match the previous size.
9. Repeat the same step for the four form features on the bottom face of the model. Use the **Emboss_with_hole.dwg** form feature.

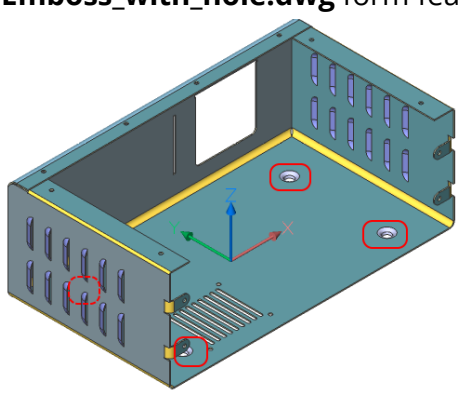

10. Rotate the view to see the bottom face of the model and draw a line with a length of **150mm**, similar to the picture below.

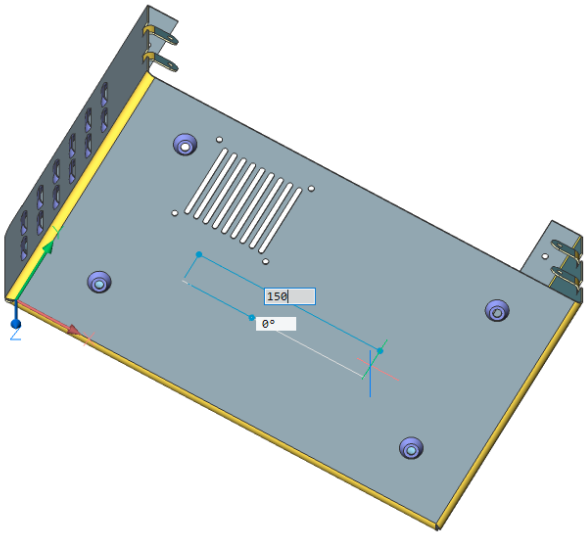

11. Go to the Ribbon under Sheet Metal in the Modify section and activate the Rib (**SMRIB**) tool or hover over the line and use Quad button. It should generate a supporting rib feature.

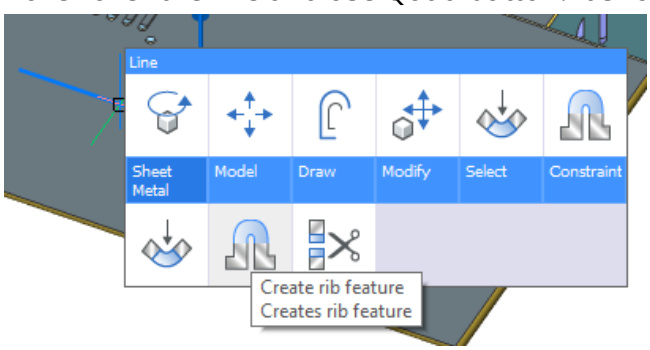

12. Go to the Mechanical Browser, select Rib feature. Then change its parameters in the properties panel. The exact dimensions are not important, just give it a try and see how it reacts to your input.

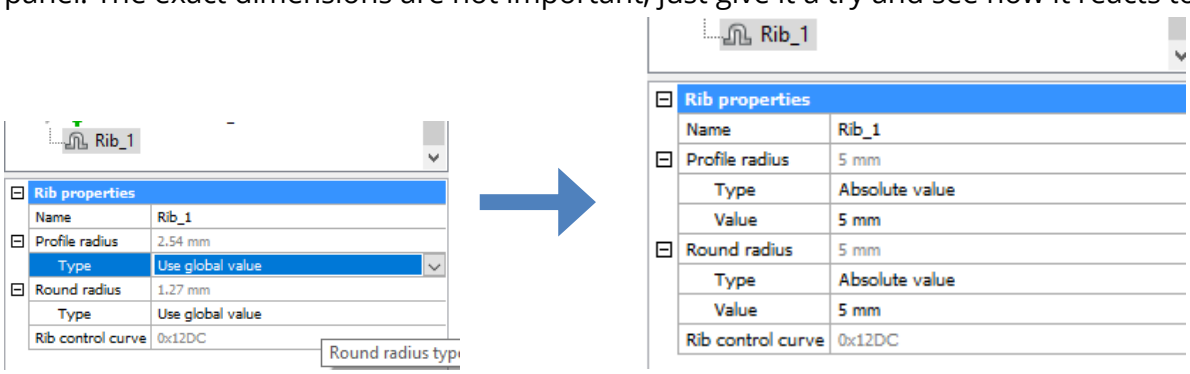

13. **Unfold** the model, like we have done previously.

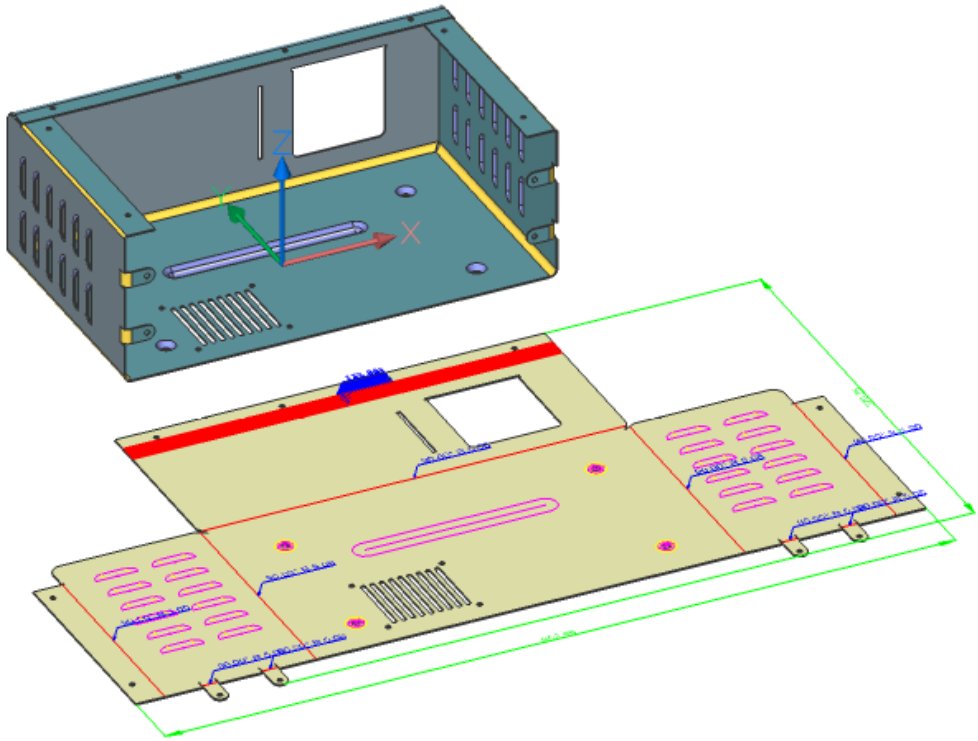

As you can see, even with imported models we can model and modify them as if they are native to BricsCAD.

Sheet metal assembly export

Before this exercise be sure to download the entire folder for this exercise.

1. Then open the **turnstile def.dwg** assembly file from your local 24/7 download path.

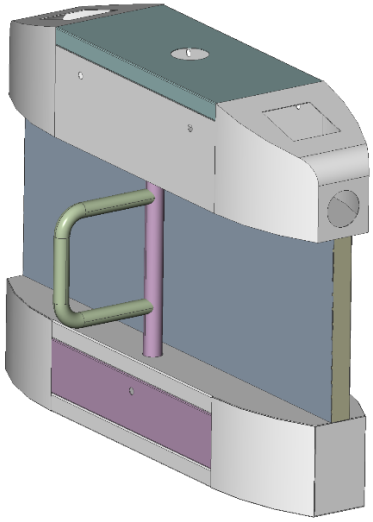

2. Observe the different components in the mechanical browser. This assembly consists of sheet metal parts as well as standard solids.
3. Call the **SMASSEMBLYEXPORT** command in the command bar. In the dialogue select "**Output folder**" and in the window that pops up, select the folder "**OUT**", or create a new folder where it is convenient for you. Then in the dialogue select "**Entire model**".
4. Open the OUT folder and you can see the parts being exported and a report being made.

   This command will search the assembly structure of this current drawing, for 3D solids and applies the commands SMCONVERT and SMEXPORT2D to them. The information taken from these solids and the output of the commands will be presented in a generated report. The report will indicate the status of the parts and links to corresponding .dwg and .dxf files, as well as generated thumbnails to easily visualize each part in the report.

5. Open the "**turnstile def_report**" located in the OUT folder, or any other output folder you might have chosen. Find the "**Top_assembly**" in the report and notice how it says "**Poor Sheet Metal**", this means there is something wrong with this sheet metal part and we must fix it.

7	Top_assembly : A4	1	2.00		SmExport2d failed.	Poor Sheet Metal			Open dwg as copy...	

6. Open the **Top_assembly.dwg** from the output folder. If you inspect the model you can see that it does not have any bends or junctions, which makes it unable to unfold.

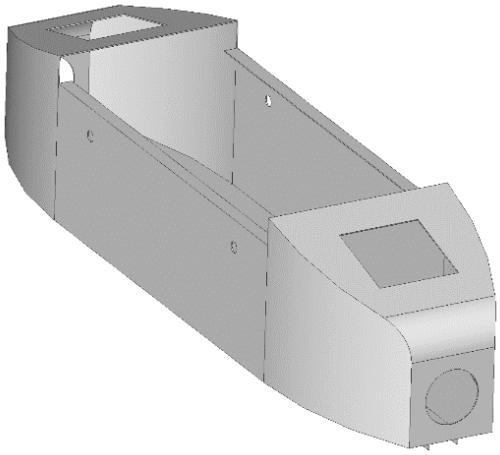

7. Convert it to sheet metal by going to Sheet Metal on the ribbon or by using the **SMCONVERT** command.

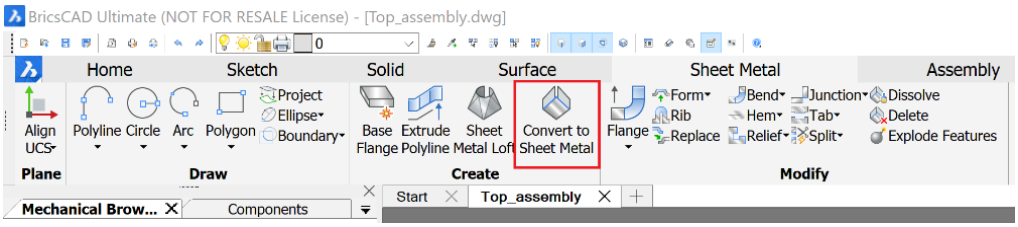

8. Under the Sheet Metal tab click Bend and apply to the entire model.
9. Next in the same location on the ribbon, select **Junction** and apply it to the whole model. And then select the edges of the large radii and apply **Junction** to them also, as seen below.

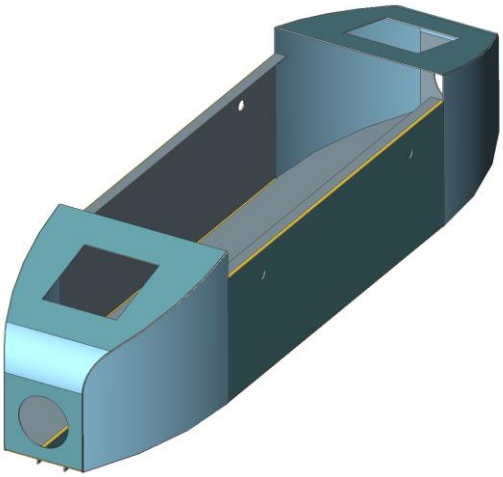

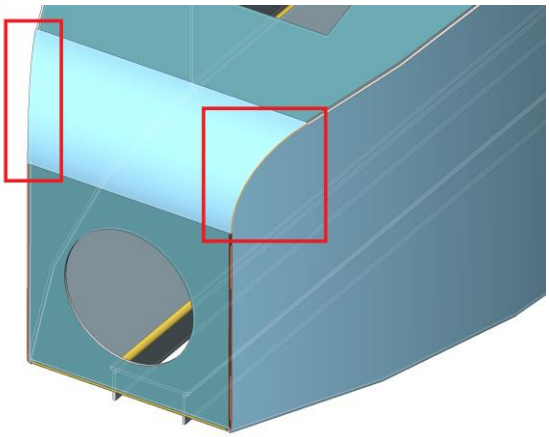

10. Now the component should be fixed, so under the Sheet Metal tab select “Unfold Body” and select a face on the body to start the unfolding. If it does not unfold, try selecting a different face.

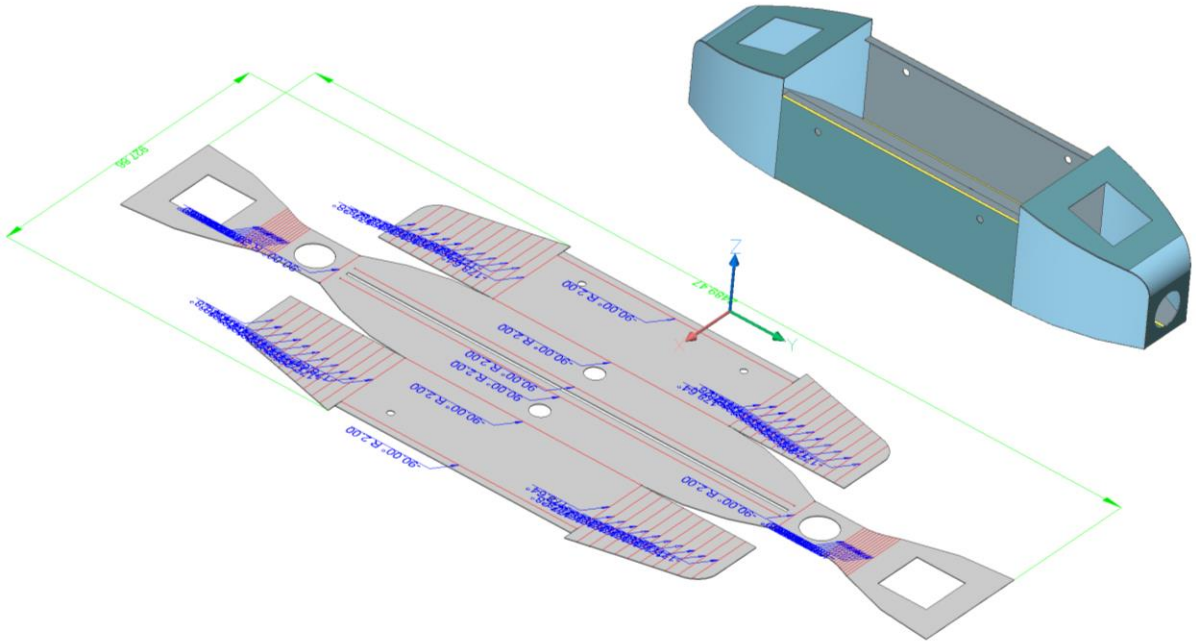

Now this sheet metal part is fixed. If we were to put this into the main assembly again we could create a new export log and we would see that it is successfully classified as sheet metal with the accompanying files and thumbnails, just like the other sheet metal parts.